U_160_Power_1
160_Power_1.SchDoc

U_180_Power_2
180_Power_2.SchDoc

U_200_Verdin
200_Verdin.SchDoc

U_201_Verdin_2
201_Verdin_2.SchDoc

U_800_Peripherals
800_Peripherals.SchDoc

U_230_SD_Card
230_SD_Card.SchDoc

U_210_Translators
210_Translators.SchDoc

U_220_Debug
220_Debug.SchDoc

U_300_USB1_OTG
300_USB1_OTG.SchDoc

U_305_USB_Hub
305_USB_Hub.SchDoc

U_310_USB2
310_USB2.SchDoc

U_350_Ethernet
350_Ethernet.SchDoc

U_400_MiniPCIe
400_MiniPCIe.SchDoc

U_420_MIPI_DSI
420_MIPI_DSI.SchDoc

U_440_MIPI_CSI
440_MIPI_CSI.SchDoc

U_500_CAN
500_CAN.SchDoc

U_900_Expansion
900_Expansion.SchDoc

U_460_HDMI_1
460_HDMI_1.SchDoc

U_480_HDMI_2
480_HDMI_2.SchDoc

Fiducials Top Layer

FID1 FID2 FID3
FID FID FID
Fiducial round Fiducial round Fiducial round

Fiducials Bottom Layer

FID4 FID5 FID6
FID FID FID
Fiducial round Fiducial round Fiducial round

Mounting Holes

H1 H2 H3 H4
Hole Hole Hole Hole
Hole Hole Hole Hole Hole
Shld Shld Shld Shld

Bumpers

B5 B6 B7 B8

LBL1 LBL2 LBL3

Toradex Logo
MECH1

Title	45776002 - Yavia Development Board v1.0		
Size: Letter	Number:	Revision:	
Date: 10/31/2022	Time: 2:02:50 PM	Sheet of	
File: 000_Main.SchDoc			

Linear Computing
697 Vaughan Road
Toronto, ON, M6E 2Y7
Canada

Linear Computing

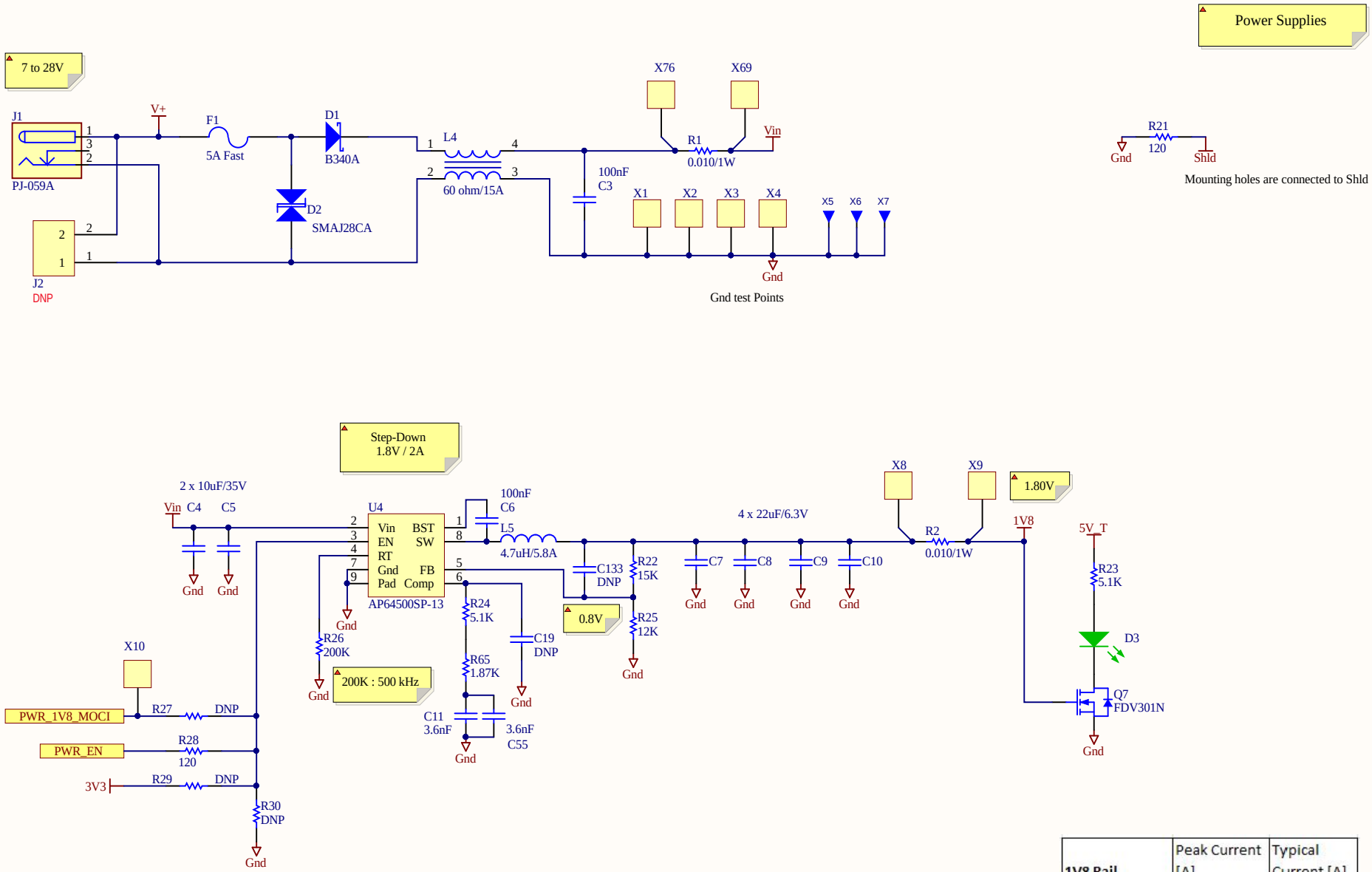

1V8 Rail	Peak Current [A]	Typical Current [A]
MiniPCIe	0.5	0
DSI to HDMI	0.15	0.15
Other Internal	0.1	0.1
Daughter Cards	0.5	0.2
Total	**1.25**	**0.45**

Title	45776002 - Yavia Development Board v1.0		Linear Computing 697 Vaughan Road Toronto, ON, M6E 2Y7 Canada
Size: Letter	Number:	Revision:	
Date: 10/31/2022	Time: 2:02:50 PM	Sheet of	
File: 160_Power_1.SchDoc			

Linear Computing

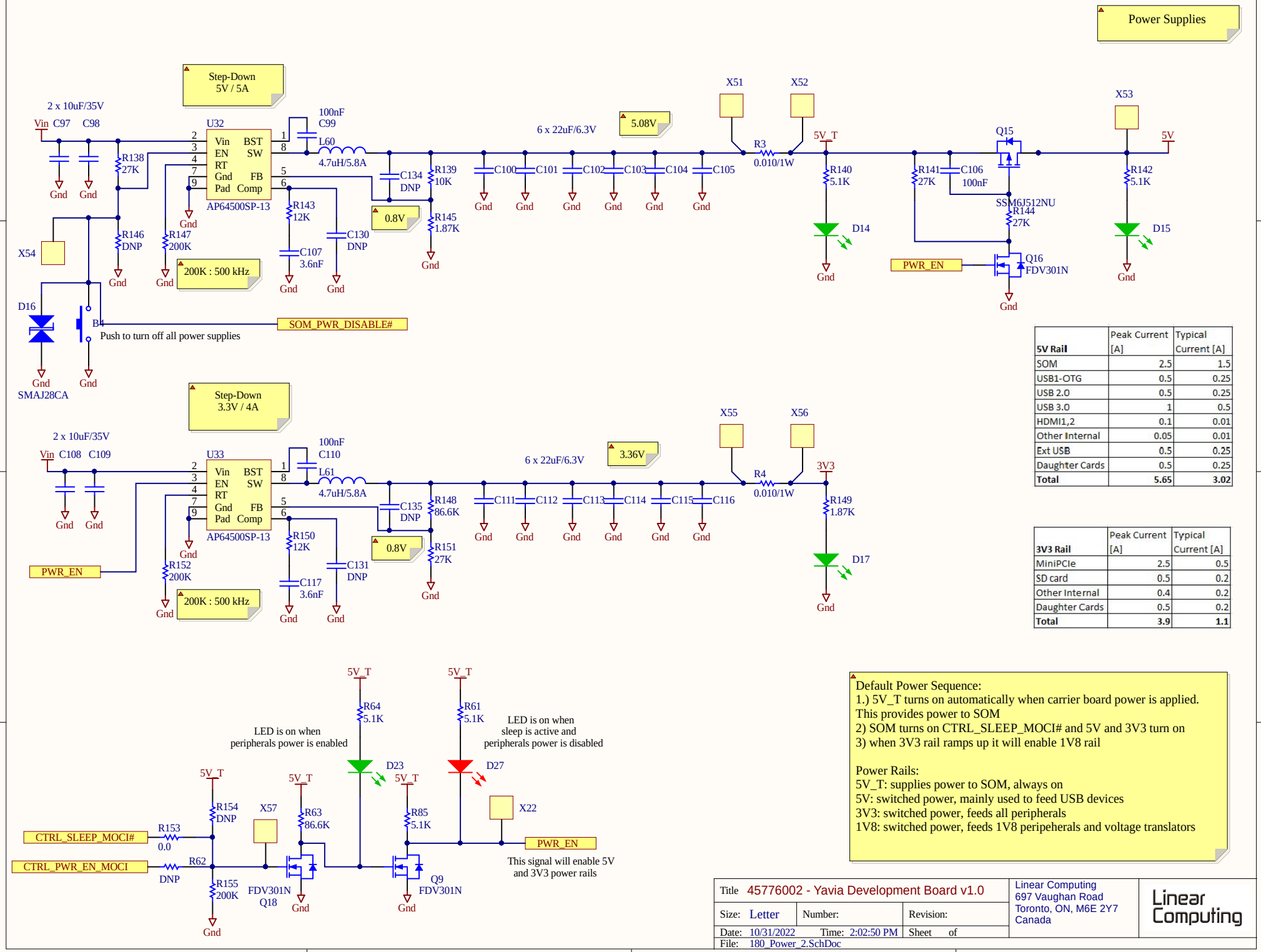

5V Rail	Peak Current [A]	Typical Current [A]
SOM	2.5	1.5
USB1-OTG	0.5	0.25
USB 2.0	0.5	0.25
USB 3.0	1	0.5
HDMI1,2	0.1	0.01
Other Internal	0.05	0.01
Ext USB	0.5	0.25
Daughter Cards	0.5	0.25
Total	**5.65**	**3.02**

3V3 Rail	Peak Current [A]	Typical Current [A]
MiniPCIe	2.5	0.5
SD card	0.5	0.2
Other Internal	0.4	0.2
Daughter Cards	0.5	0.2
Total	**3.9**	**1.1**

Default Power Sequence:
1.) 5V_T turns on automatically when carrier board power is applied. This provides power to SOM
2) SOM turns on CTRL_SLEEP_MOCI# and 5V and 3V3 turn on
3) when 3V3 rail ramps up it will enable 1V8 rail

Power Rails:
5V_T: supplies power to SOM, always on
5V: switched power, mainly used to feed USB devices
3V3: switched power, feeds all peripherals
1V8: switched power, feeds 1V8 peripeherals and voltage translators

Title	45776002 - Yavia Development Board v1.0		
Size: Letter	Number:	Revision:	
Date: 10/31/2022	Time: 2:02:50 PM	Sheet of	
File: 180_Power_2.SchDoc			

Linear Computing
697 Vaughan Road
Toronto, ON, M6E 2Y7
Canada

Linear Computing

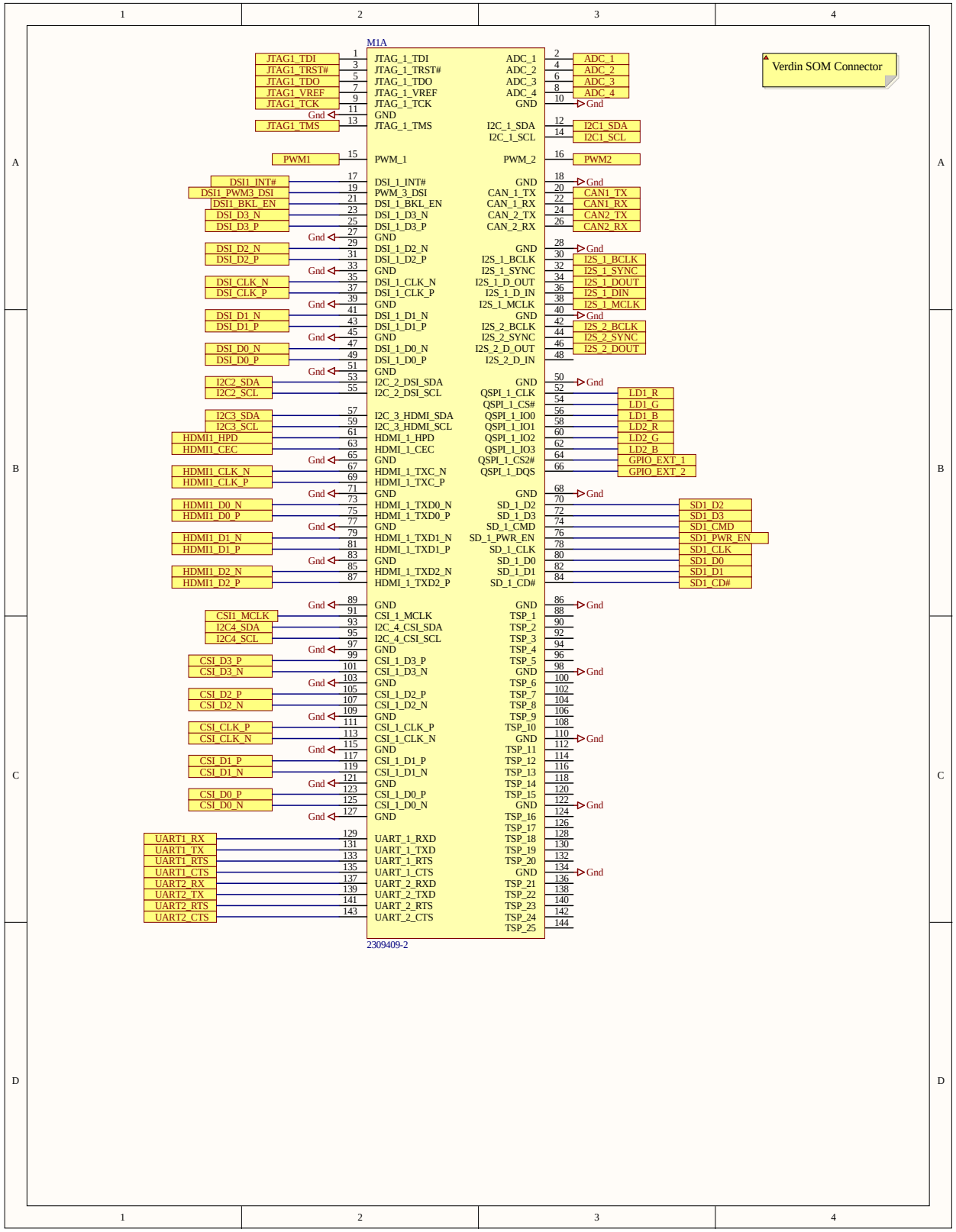
M1A
Verdin SOM Connector
JTAG1_TDI 1 JTAG_1_TDI
JTAG1_TRST# 3 JTAG_1_TRST#
JTAG1_TDO 5 JTAG_1_TDO
JTAG1_VREF 7 JTAG_1_VREF
JTAG1_TCK 9 JTAG_1_TCK
Gnd 11 GND
JTAG1_TMS 13 JTAG_1_TMS
PWM1 15 PWM_1
DSI1_INT# 17 DSI_1_INT#
DSI1_PWM3_DSI 19 PWM_3_DSI
DSI1_BKL_EN 21 DSI_1_BKL_EN
DSI_D3_N 23 DSI_1_D3_N
DSI_D3_P 25 DSI_1_D3_P
Gnd 27 GND
DSI_D2_N 29 DSI_1_D2_N
DSI_D2_P 31 DSI_1_D2_P
Gnd 33 GND
DSI_CLK_N 35 DSI_1_CLK_N
DSI_CLK_P 37 DSI_1_CLK_P
Gnd 39 GND
DSI_D1_N 41 DSI_1_D1_N
DSI_D1_P 43 DSI_1_D1_P
Gnd 45 GND
DSI_D0_N 47 DSI_1_D0_N
DSI_D0_P 49 DSI_1_D0_P
Gnd 51 GND
I2C2_SDA 53 I2C_2_DSI_SDA
I2C2_SCL 55 I2C_2_DSI_SCL
I2C3_SDA 57 I2C_3_HDMI_SDA
I2C3_SCL 59 I2C_3_HDMI_SCL
HDMI1_HPD 61 HDMI_1_HPD
HDMI1_CEC 63 HDMI_1_CEC
Gnd 65 GND
HDMI1_CLK_N 67 HDMI_1_TXC_N
HDMI1_CLK_P 69 HDMI_1_TXC_P
Gnd 71 GND
HDMI1_D0_N 73 HDMI_1_TXD0_N
HDMI1_D0_P 75 HDMI_1_TXD0_P
Gnd 77 GND
HDMI1_D1_N 79 HDMI_1_TXD1_N
HDMI1_D1_P 81 HDMI_1_TXD1_P
Gnd 83 GND
HDMI1_D2_N 85 HDMI_1_TXD2_N
HDMI1_D2_P 87 HDMI_1_TXD2_P
Gnd 89 GND
CSI1_MCLK 91 CSI_1_MCLK
I2C4_SDA 93 I2C_4_CSI_SDA
I2C4_SCL 95 I2C_4_CSI_SCL
Gnd 97 GND
CSI_D3_P 99 CSI_1_D3_P
CSI_D3_N 101 CSI_1_D3_N
Gnd 103 GND
CSI_D2_P 105 CSI_1_D2_P
CSI_D2_N 107 CSI_1_D2_N
Gnd 109 GND
CSI_CLK_P 111 CSI_1_CLK_P
CSI_CLK_N 113 CSI_1_CLK_N
Gnd 115 GND
CSI_D1_P 117 CSI_1_D1_P
CSI_D1_N 119 CSI_1_D1_N
Gnd 121 GND
CSI_D0_P 123 CSI_1_D0_P
CSI_D0_N 125 CSI_1_D0_N
Gnd 127 GND
UART1_RX 129 UART_1_RXD
UART1_TX 131 UART_1_TXD
UART1_RTS 133 UART_1_RTS
UART1_CTS 135 UART_1_CTS
UART2_RX 137 UART_2_RXD
UART2_TX 139 UART_2_TXD
UART2_RTS 141 UART_2_RTS
UART2_CTS 143 UART_2_CTS
2309409-2
ADC_1 2 ADC_1
ADC_2 4 ADC_2
ADC_3 6 ADC_3
ADC_4 8 ADC_4
GND 10 Gnd
I2C_1_SDA 12 I2C1_SDA
I2C_1_SCL 14 I2C1_SCL
PWM_2 16 PWM2
GND 18 Gnd
CAN_1_TX 20 CAN1_TX
CAN_1_RX 22 CAN1_RX
CAN_2_TX 24 CAN2_TX
CAN_2_RX 26 CAN2_RX
GND 28 Gnd
I2S_1_BCLK 30 I2S_1_BCLK
I2S_1_SYNC 32 I2S_1_SYNC
I2S_1_D_OUT 34 I2S_1_DOUT
I2S_1_D_IN 36 I2S_1_DIN
I2S_1_MCLK 38 I2S_1_MCLK
GND 40 Gnd
I2S_2_BCLK 42 I2S_2_BCLK
I2S_2_SYNC 44 I2S_2_SYNC
I2S_2_D_OUT 46 I2S_2_DOUT
I2S_2_D_IN 48
GND 50 Gnd
QSPI_1_CLK 52 LD1_R
QSPI_1_CS# 54 LD1_G
QSPI_1_IO0 56 LD1_B
QSPI_1_IO1 58 LD2_R
QSPI_1_IO2 60 LD2_G
QSPI_1_IO3 62 LD2_B
QSPI_1_CS2# 64 GPIO_EXT_1
QSPI_1_DQS 66 GPIO_EXT_2
GND 68 Gnd
SD_1_D2 70 SD1_D2
SD_1_D3 72 SD1_D3
SD_1_CMD 74 SD1_CMD
SD_1_PWR_EN 76 SD1_PWR_EN
SD_1_CLK 78 SD1_CLK
SD_1_D0 80 SD1_D0
SD_1_D1 82 SD1_D1
SD_1_CD# 84 SD1_CD#
GND 86 Gnd
TSP_1 88
TSP_2 90
TSP_3 92
TSP_4 94
TSP_5 96
GND 98 Gnd
TSP_6 100
TSP_7 102
TSP_8 104
TSP_9 106
TSP_10 108
GND 110 Gnd
TSP_11 112
TSP_12 114
TSP_13 116
TSP_14 118
TSP_15 120
GND 122 Gnd
TSP_16 124
TSP_17 126
TSP_18 128
TSP_19 130
TSP_20 132
GND 134 Gnd
TSP_21 136
TSP_22 138
TSP_23 140
TSP_24 142
TSP_25 144

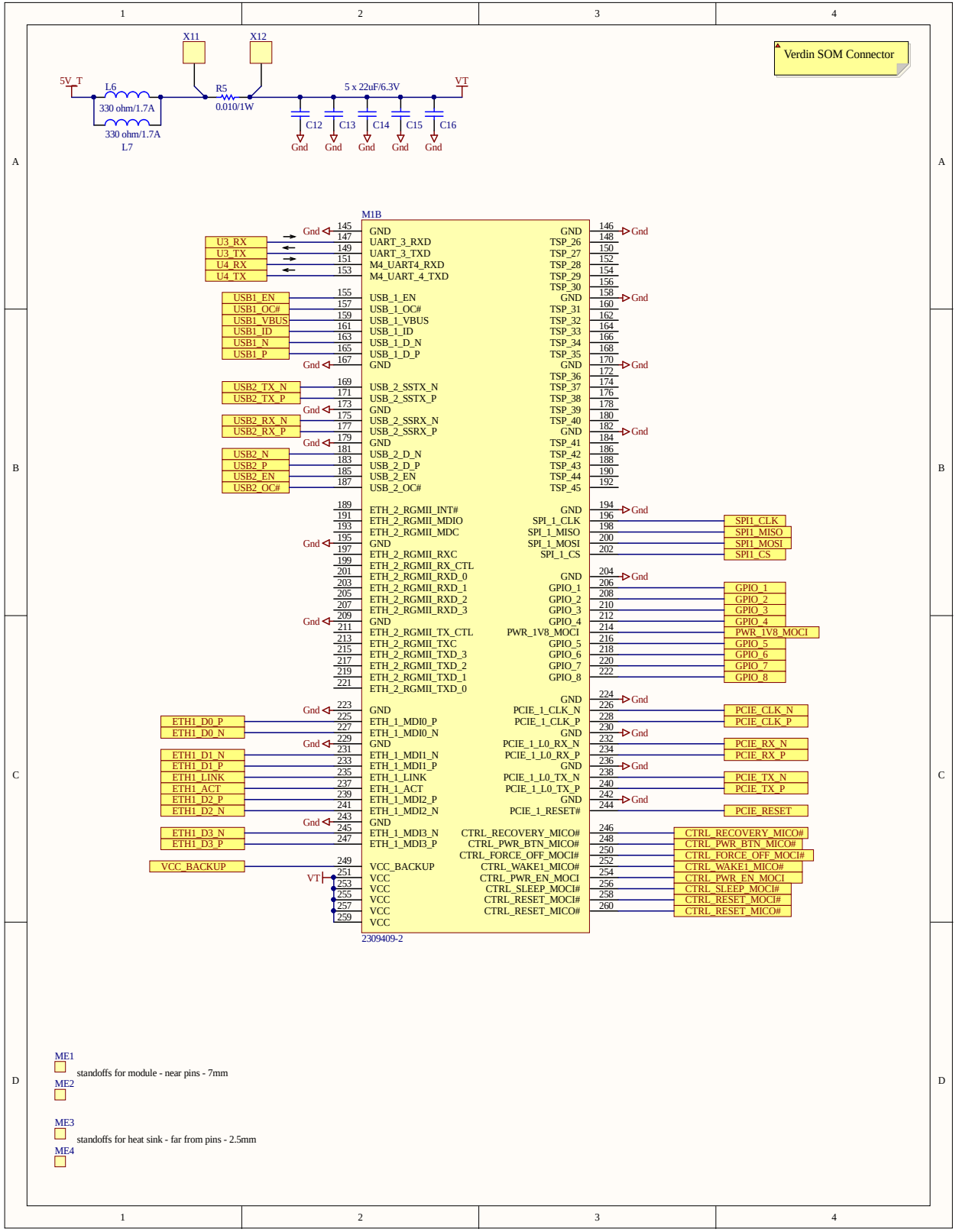
Verdin SOM Connector
X11
X12
5V_T
L6
330 ohm/1.7A
330 ohm/1.7A
L7
R5
0.010/1W
5 x 22uF/6.3V
VT
C12
C13
C14
C15
C16
Gnd
M1B
GND
UART_3_RXD
UART_3_TXD
M4_UART4_RXD
M4_UART_4_TXD
USB_1_EN
USB_1_OC#
USB_1_VBUS
USB_1_ID
USB_1_D_N
USB_1_D_P
USB_2_SSTX_N
USB_2_SSTX_P
USB_2_SSRX_N
USB_2_SSRX_P
USB_2_D_N
USB_2_D_P
USB_2_EN
USB_2_OC#
ETH_2_RGMII_INT#
ETH_2_RGMII_MDIO
ETH_2_RGMII_MDC
ETH_2_RGMII_RXC
ETH_2_RGMII_RX_CTL
ETH_2_RGMII_RXD_0
ETH_2_RGMII_RXD_1
ETH_2_RGMII_RXD_2
ETH_2_RGMII_RXD_3
ETH_2_RGMII_TX_CTL
ETH_2_RGMII_TXC
ETH_2_RGMII_TXD_3
ETH_2_RGMII_TXD_2
ETH_2_RGMII_TXD_1
ETH_2_RGMII_TXD_0
ETH_1_MDI0_P
ETH_1_MDI0_N
ETH_1_MDI1_N
ETH_1_MDI1_P
ETH_1_LINK
ETH_1_ACT
ETH_1_MDI2_P
ETH_1_MDI2_N
ETH_1_MDI3_N
ETH_1_MDI3_P
VCC_BACKUP
VCC
TSP_26
TSP_27
TSP_28
TSP_29
TSP_30
TSP_31
TSP_32
TSP_33
TSP_34
TSP_35
TSP_36
TSP_37
TSP_38
TSP_39
TSP_40
TSP_41
TSP_42
TSP_43
TSP_44
TSP_45
SPI_1_CLK
SPI_1_MISO
SPI_1_MOSI
SPI_1_CS
GPIO_1
GPIO_2
GPIO_3
GPIO_4
PWR_1V8_MOCI
GPIO_5
GPIO_6
GPIO_7
GPIO_8
PCIE_1_CLK_N
PCIE_1_CLK_P
PCIE_1_L0_RX_N
PCIE_1_L0_RX_P
PCIE_1_L0_TX_N
PCIE_1_L0_TX_P
PCIE_1_RESET#
CTRL_RECOVERY_MICO#
CTRL_PWR_BTN_MICO#
CTRL_FORCE_OFF_MOCI#
CTRL_WAKE1_MICO#
CTRL_PWR_EN_MOCI
CTRL_SLEEP_MOCI#
CTRL_RESET_MOCI#
CTRL_RESET_MICO#
U3_RX
U3_TX
U4_RX
U4_TX
USB1_EN
USB1_OC#
USB1_VBUS
USB1_ID
USB1_N
USB1_P
USB2_TX_N
USB2_TX_P
USB2_RX_N
USB2_RX_P
USB2_N
USB2_P
USB2_EN
USB2_OC#
ETH1_D0_P
ETH1_D0_N
ETH1_D1_N
ETH1_D1_P
ETH1_LINK
ETH1_ACT
ETH1_D2_P
ETH1_D2_N
ETH1_D3_N
ETH1_D3_P
VCC_BACKUP
2309409-2
ME1
ME2
standoffs for module - near pins - 7mm
ME3
ME4
standoffs for heat sink - far from pins - 2.5mm

Voltage Translators

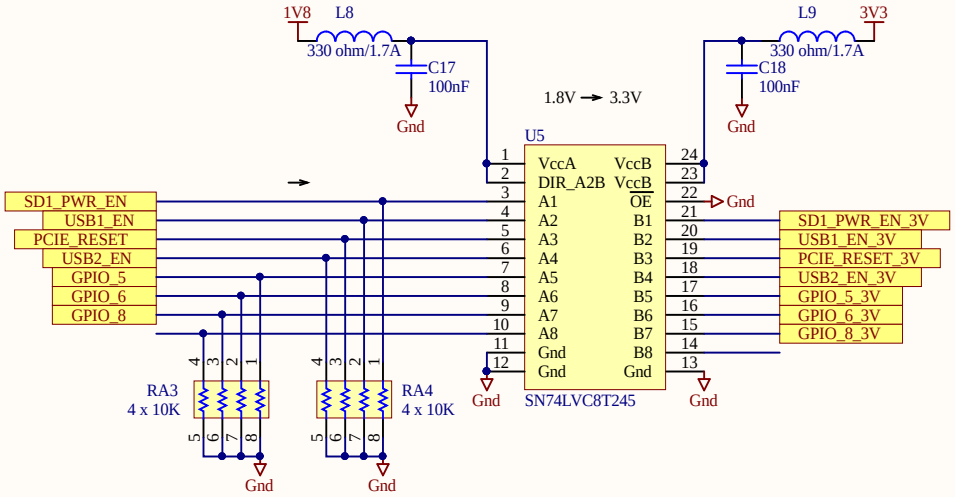

Translator for I2C1

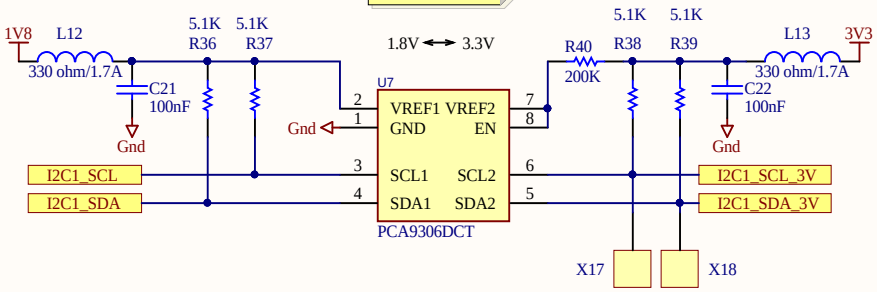

Title 45776002 - Yavia Development Board v1.0			Linear Computing 697 Vaughan Road Toronto, ON, M6E 2Y7 Canada
Size: Letter	Number:	Revision:	
Date: 10/31/2022	Time: 2:02:50 PM	Sheet of	
File: 210_Translators.SchDoc			

Debug Connection for Linux Console and Cortex-M UART

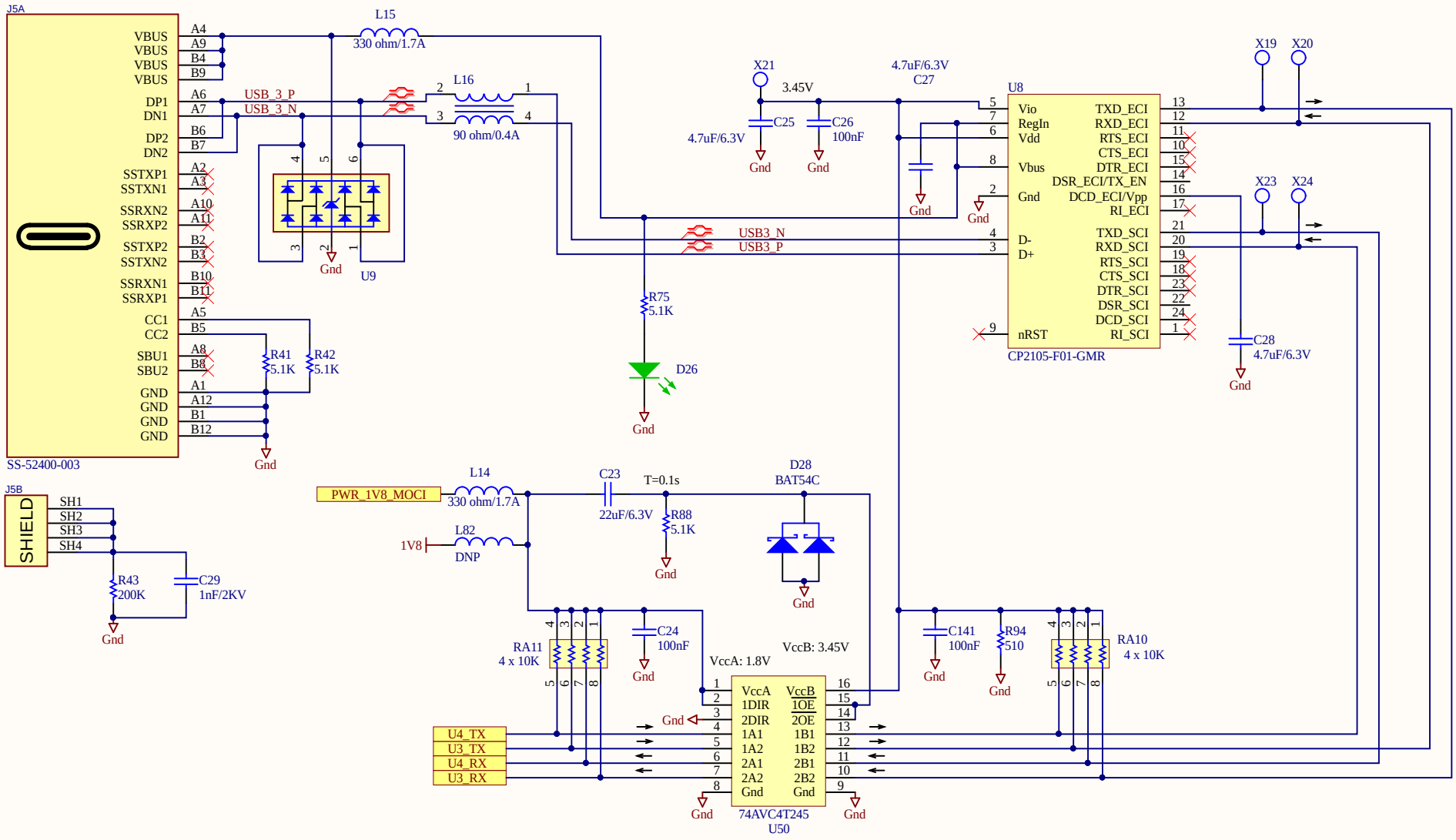

DIRx	Direction
0	A <= B
1	A => B

Title 45776002 - Yavia Development Board v1.0		Linear Computing 697 Vaughan Road Toronto, ON, M6E 2Y7 Canada
Size: Letter	Number:	Revision:
Date: 10/31/2022 Time: 2:02:50 PM	Sheet of	
File: 220_Debug.SchDoc		

Linear Computing

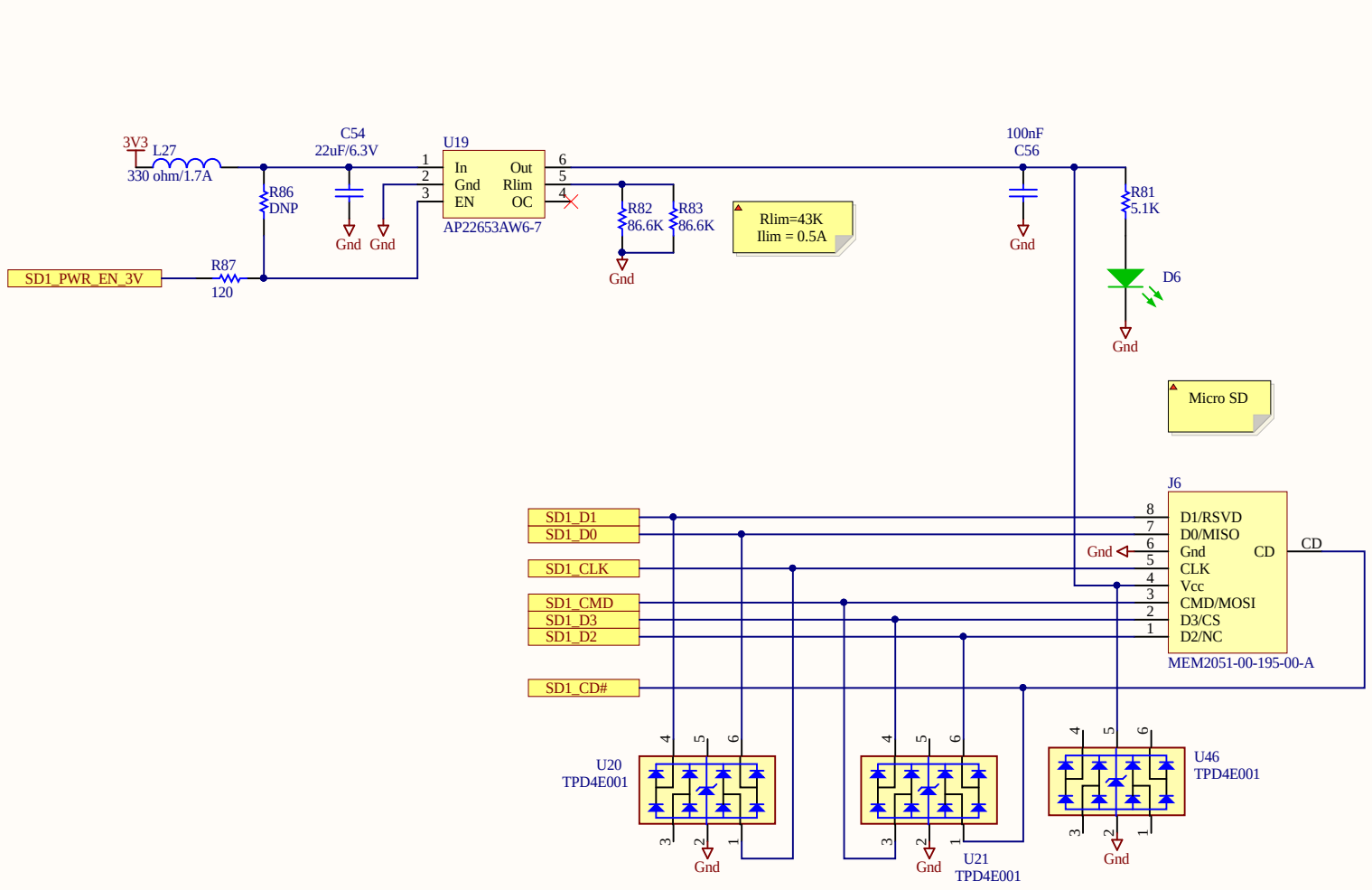

Title 45776002 - Yavia Development Board v1.0			Linear Computing 697 Vaughan Road Toronto, ON, M6E 2Y7 Canada
Size: Letter	Number:	Revision:	
Date: 10/31/2022 Time: 2:02:50 PM		Sheet of	
File: 230_SD_Card.SchDoc			

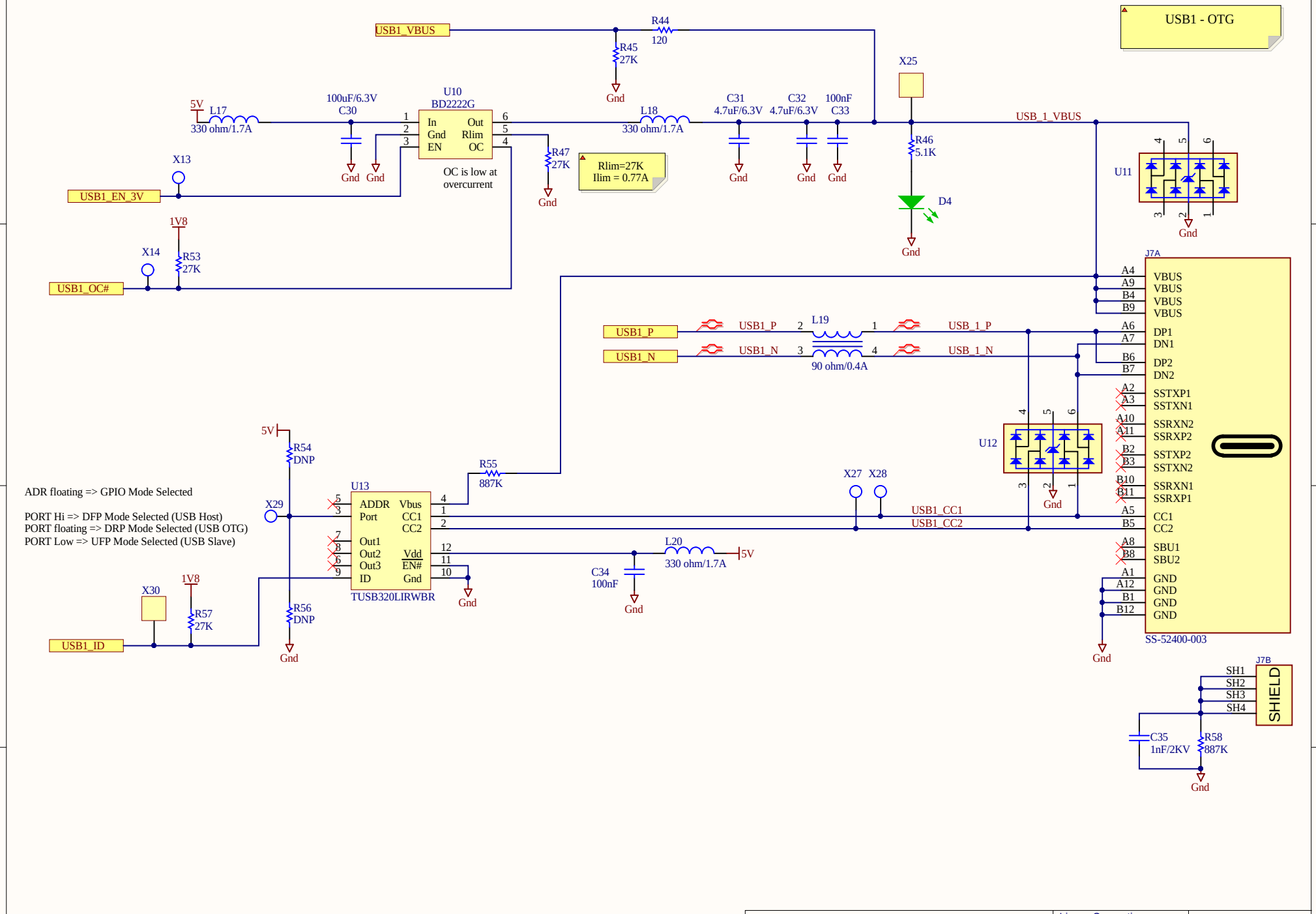
USB1 - OTG
USB1_VBUS
R44
120
R45
27K
Gnd
X25
5V
L17
330 ohm/1.7A
100uF/6.3V
C30
U10
BD2222G
In
Gnd
EN
Out
Rlim
OC
OC is low at
overcurrent
L18
330 ohm/1.7A
C31
4.7uF/6.3V
C32
4.7uF/6.3V
100nF
C33
USB_1_VBUS
R46
5.1K
D4
U11
R47
27K
Rlim=27K
Ilim = 0.77A
X13
USB1_EN_3V
1V8
X14
R53
27K
USB1_OC#
J7A
VBUS
DP1
DN1
DP2
DN2
SSTXP1
SSTXN1
SSRXN2
SSRXP2
SSTXP2
SSTXN2
SSRXN1
SSRXP1
CC1
CC2
SBU1
SBU2
GND
SS-52400-003
USB1_P
USB1_N
L19
90 ohm/0.4A
USB_1_P
USB_1_N
U12
R55
887K
X27
X28
USB1_CC1
USB1_CC2
5V
R54
DNP
ADR floating => GPIO Mode Selected
PORT Hi => DFP Mode Selected (USB Host)
PORT floating => DRP Mode Selected (USB OTG)
PORT Low => UFP Mode Selected (USB Slave)
X29
U13
ADDR
Port
Out1
Out2
Out3
ID
Vbus
CC1
CC2
Vdd
EN#
TUSB320LIRWBR
L20
330 ohm/1.7A
C34
100nF
X30
1V8
R57
27K
R56
DNP
USB1_ID
J7B
SH1
SH2
SH3
SH4
SHIELD
C35
1nF/2KV
R58
887K
Title 45776002 - Yavia Development Board v1.0
Size: Letter
Number:
Revision:
Date: 10/31/2022
Time: 2:02:50 PM
Sheet of
File: 300_USB1_OTG.SchDoc
Linear Computing
697 Vaughan Road
Toronto, ON, M6E 2Y7
Canada
Linear Computing

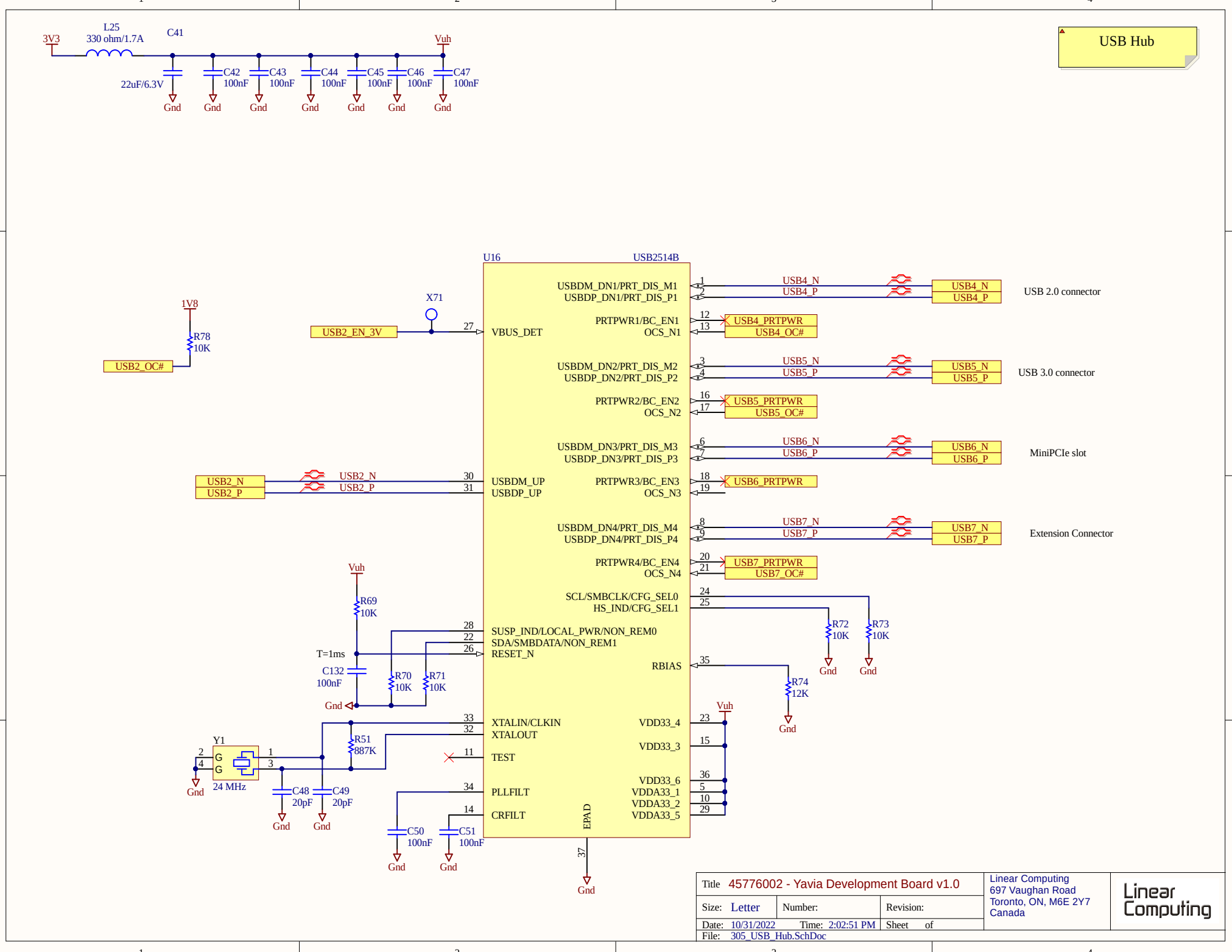
USB Hub
3V3
L25
330 ohm/1.7A
C41
22uF/6.3V
C42 100nF
C43 100nF
C44 100nF
C45 100nF
C46 100nF
C47 100nF
Vuh
Gnd
U16
USB2514B
USBDM_DN1/PRT_DIS_M1
USBDP_DN1/PRT_DIS_P1
PRTPWR1/BC_EN1
OCS_N1
USBDM_DN2/PRT_DIS_M2
USBDP_DN2/PRT_DIS_P2
PRTPWR2/BC_EN2
OCS_N2
USBDM_DN3/PRT_DIS_M3
USBDP_DN3/PRT_DIS_P3
PRTPWR3/BC_EN3
OCS_N3
USBDM_DN4/PRT_DIS_M4
USBDP_DN4/PRT_DIS_P4
PRTPWR4/BC_EN4
OCS_N4
SCL/SMBCLK/CFG_SEL0
HS_IND/CFG_SEL1
SUSP_IND/LOCAL_PWR/NON_REM0
SDA/SMBDATA/NON_REM1
RESET_N
RBIAS
VBUS_DET
USBDM_UP
USBDP_UP
XTALIN/CLKIN
XTALOUT
TEST
PLLFILT
CRFILT
VDD33_4
VDD33_3
VDD33_6
VDDA33_1
VDDA33_2
VDDA33_5
EPAD
USB4_N
USB4_P
USB4_PRTPWR
USB4_OC#
USB5_N
USB5_P
USB5_PRTPWR
USB5_OC#
USB6_N
USB6_P
USB6_PRTPWR
USB7_N
USB7_P
USB7_PRTPWR
USB7_OC#
USB 2.0 connector
USB 3.0 connector
MiniPCIe slot
Extension Connector
X71
USB2_EN_3V
1V8
R78 10K
USB2_OC#
USB2_N
USB2_P
R69 10K
T=1ms
C132 100nF
R70 10K
R71 10K
R72 10K
R73 10K
R74 12K
R51 887K
Y1
24 MHz
C48 20pF
C49 20pF
C50 100nF
C51 100nF
Title 45776002 - Yavia Development Board v1.0
Size: Letter
Number:
Revision:
Date: 10/31/2022
Time: 2:02:51 PM
Sheet of
File: 305_USB_Hub.SchDoc
Linear Computing
697 Vaughan Road
Toronto, ON, M6E 2Y7
Canada
Linear Computing

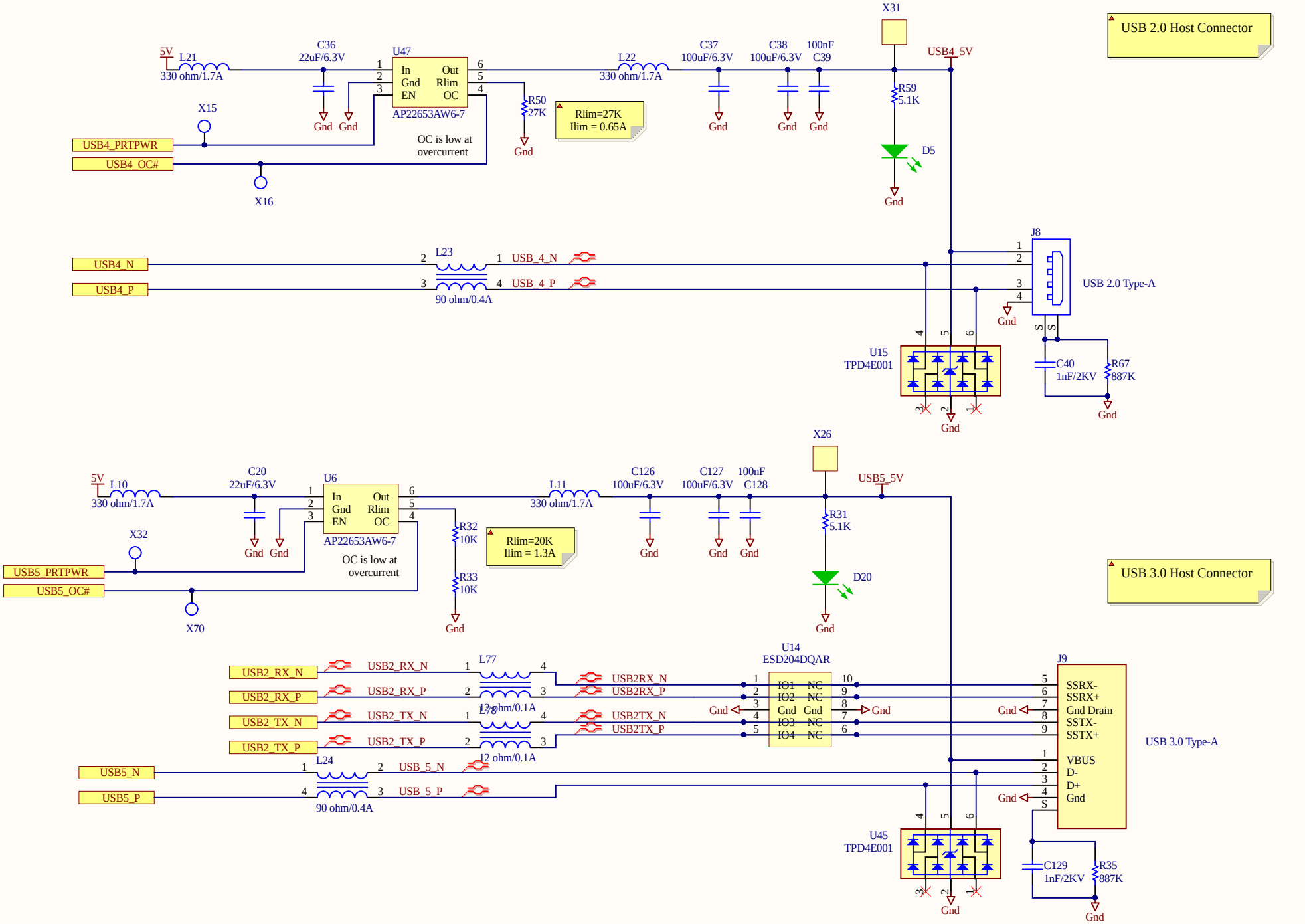

Title	45776002 - Yavia Development Board v1.0		Linear Computing 697 Vaughan Road Toronto, ON, M6E 2Y7 Canada
Size: Letter	Number:	Revision:	
Date: 10/31/2022	Time: 2:02:51 PM	Sheet of	
File: 310_USB2.SchDoc			

Linear Computing

Gbit Ethernet Connection

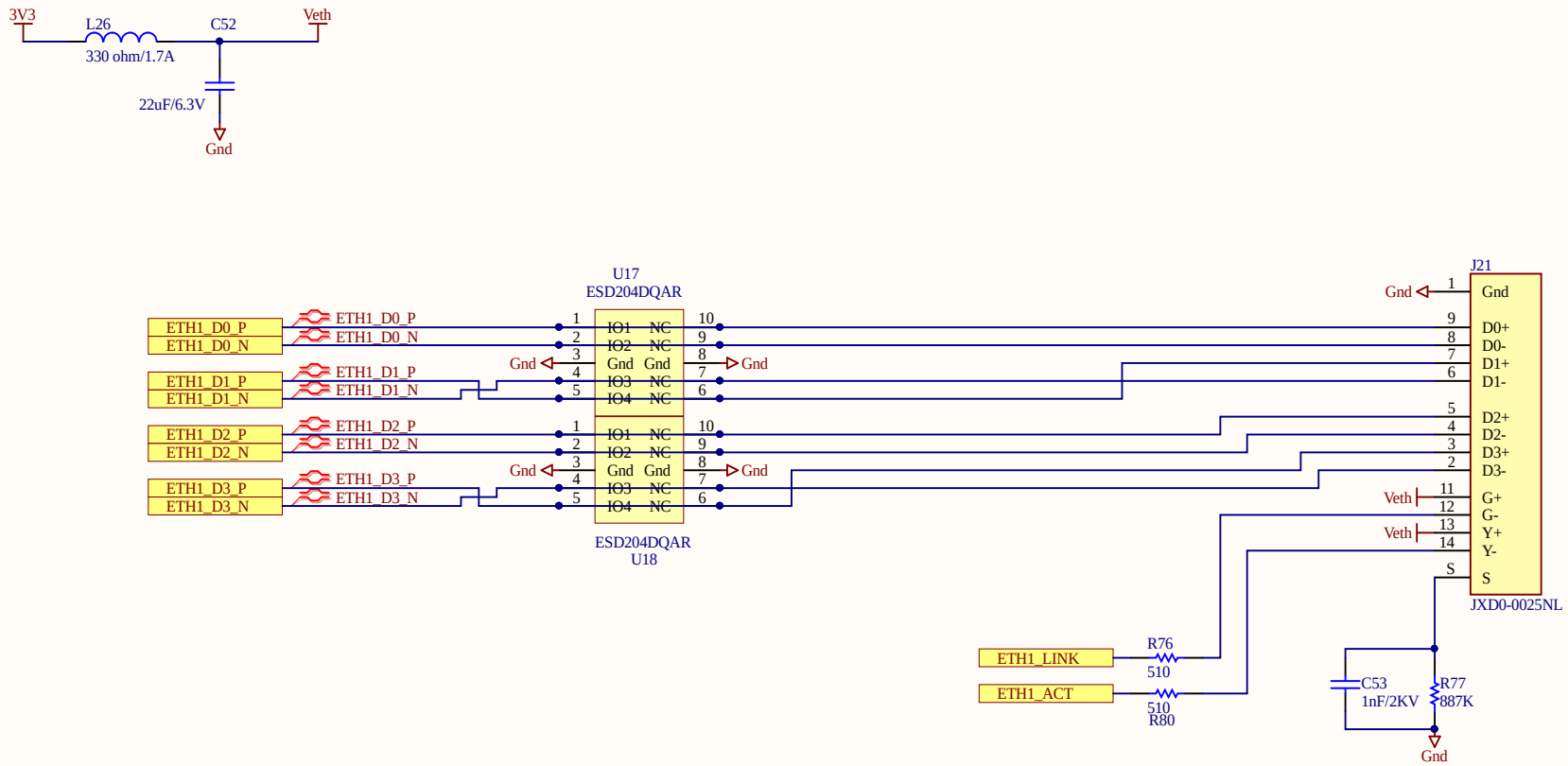

Title 45776002 - Yavia Development Board v1.0			Linear Computing 697 Vaughan Road Toronto, ON, M6E 2Y7 Canada
Size: Letter	Number:	Revision:	
Date: 10/31/2022 Time: 2:02:51 PM		Sheet of	
File: 350_Ethernet.SchDoc			

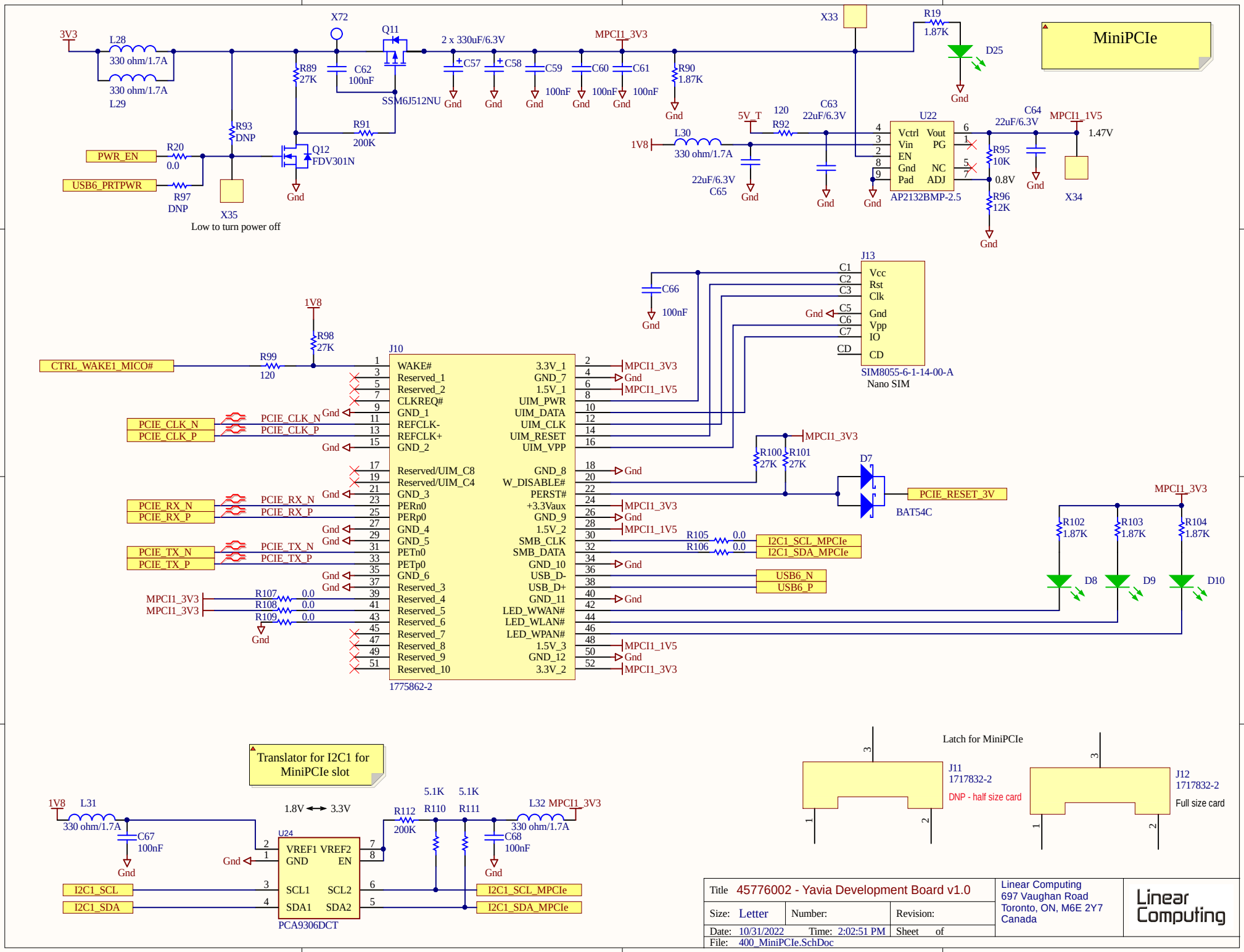
MiniPCIe
3V3
L28
330 ohm/1.7A
330 ohm/1.7A
L29
X72
Q11
SSM6J512NU
2 x 330uF/6.3V
C57
C58
C59
C60
C61
MPCI1_3V3
R90
1.87K
X33
R19
1.87K
D25
Gnd
R89
27K
C62
100nF
R93
DNP
R91
200K
Q12
FDV301N
PWR_EN
R20
0.0
USB6_PRTPWR
R97
DNP
X35
Low to turn power off
5V_T
120
R92
C63
22uF/6.3V
1V8
L30
330 ohm/1.7A
22uF/6.3V
C65
U22
Vctrl
Vin
EN
Gnd
Pad
Vout
PG
NC
ADJ
AP2132BMP-2.5
C64
22uF/6.3V
MPCI1_1V5
1.47V
R95
10K
0.8V
R96
12K
X34
J13
Vcc
Rst
Clk
Gnd
Vpp
IO
CD
SIM8055-6-1-14-00-A
Nano SIM
C66
100nF
1V8
R98
27K
CTRL_WAKE1_MICO#
R99
120
J10
WAKE#
Reserved_1
Reserved_2
CLKREQ#
GND_1
REFCLK-
REFCLK+
GND_2
Reserved/UIM_C8
Reserved/UIM_C4
GND_3
PERn0
PERp0
GND_4
GND_5
PETn0
PETp0
GND_6
Reserved_3
Reserved_4
Reserved_5
Reserved_6
Reserved_7
Reserved_8
Reserved_9
Reserved_10
3.3V_1
GND_7
1.5V_1
UIM_PWR
UIM_DATA
UIM_CLK
UIM_RESET
UIM_VPP
GND_8
W_DISABLE#
PERST#
+3.3Vaux
GND_9
1.5V_2
SMB_CLK
SMB_DATA
GND_10
USB_D-
USB_D+
GND_11
LED_WWAN#
LED_WLAN#
LED_WPAN#
1.5V_3
GND_12
3.3V_2
1775862-2
PCIE_CLK_N
PCIE_CLK_P
PCIE_RX_N
PCIE_RX_P
PCIE_TX_N
PCIE_TX_P
MPCI1_3V3
MPCI1_1V5
R100
27K
R101
27K
D7
BAT54C
PCIE_RESET_3V
R105
0.0
R106
0.0
I2C1_SCL_MPCIe
I2C1_SDA_MPCIe
USB6_N
USB6_P
R107
0.0
R108
0.0
R109
0.0
R102
1.87K
R103
1.87K
R104
1.87K
D8
D9
D10
Translator for I2C1 for MiniPCIe slot
1V8
L31
330 ohm/1.7A
C67
100nF
1.8V ↔ 3.3V
U24
VREF1
GND
SCL1
SDA1
VREF2
EN
SCL2
SDA2
PCA9306DCT
R112
200K
5.1K
R110
5.1K
R111
L32 MPCI1_3V3
330 ohm/1.7A
C68
100nF
I2C1_SCL
I2C1_SDA
I2C1_SCL_MPCIe
I2C1_SDA_MPCIe
Latch for MiniPCIe
J11
1717832-2
DNP - half size card
J12
1717832-2
Full size card
Title 45776002 - Yavia Development Board v1.0
Size: Letter
Number:
Revision:
Date: 10/31/2022
Time: 2:02:51 PM
Sheet of
File: 400_MiniPCIe.SchDoc
Linear Computing
697 Vaughan Road
Toronto, ON, M6E 2Y7
Canada
Linear Computing

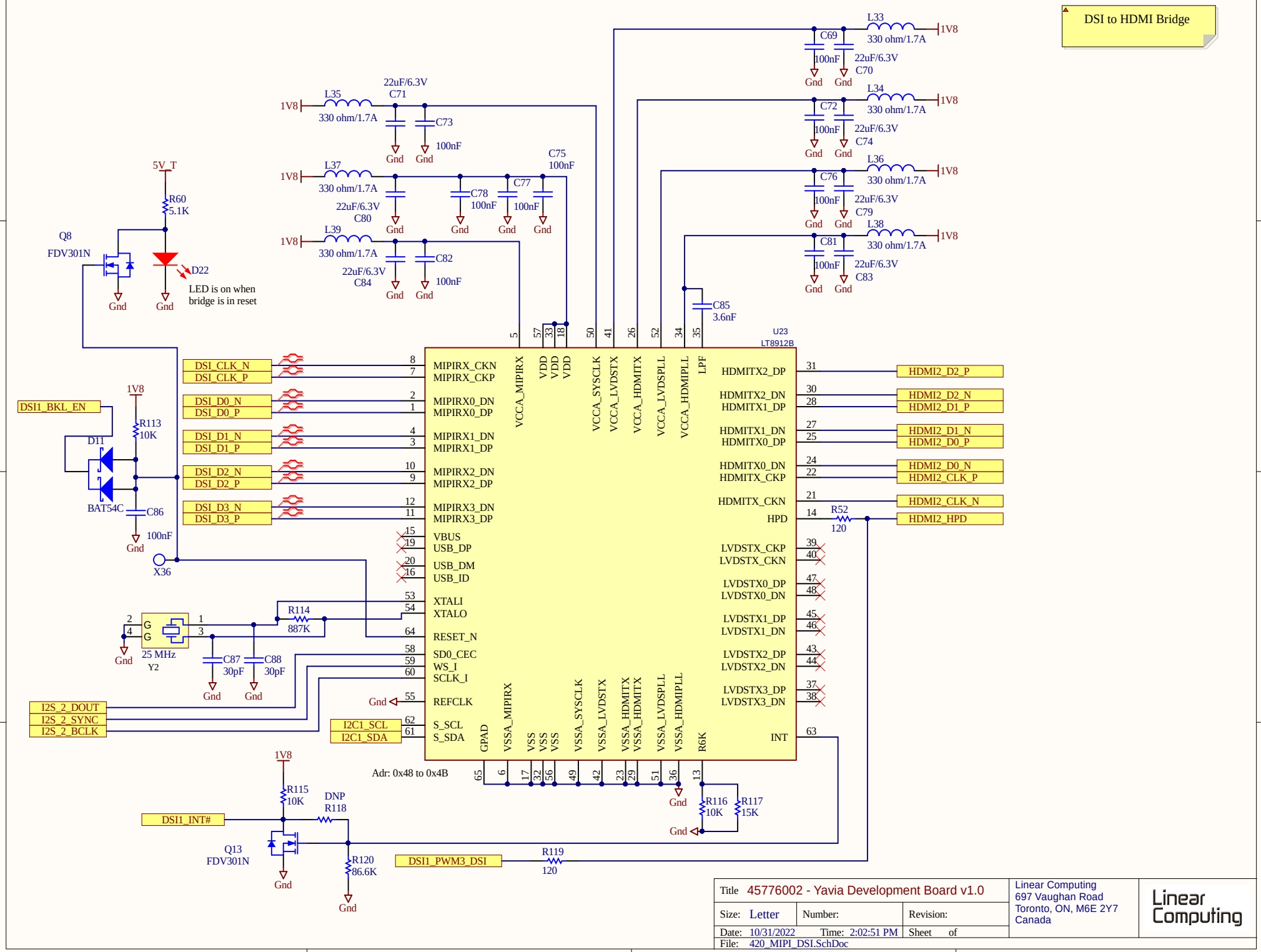
DSI to HDMI Bridge
U23
LT8912B
MIPIRX_CKN
MIPIRX_CKP
MIPIRX0_DN
MIPIRX0_DP
MIPIRX1_DN
MIPIRX1_DP
MIPIRX2_DN
MIPIRX2_DP
MIPIRX3_DN
MIPIRX3_DP
VBUS
USB_DP
USB_DM
USB_ID
XTALI
XTALO
RESET_N
SD0_CEC
WS_I
SCLK_I
REFCLK
S_SCL
S_SDA
HDMITX2_DP
HDMITX2_DN
HDMITX1_DP
HDMITX1_DN
HDMITX0_DP
HDMITX0_DN
HDMITX_CKP
HDMITX_CKN
HPD
LVDSTX_CKP
LVDSTX_CKN
LVDSTX0_DP
LVDSTX0_DN
LVDSTX1_DP
LVDSTX1_DN
LVDSTX2_DP
LVDSTX2_DN
LVDSTX3_DP
LVDSTX3_DN
INT
VCCA_MIPIRX
VDD
VCCA_SYSCLK
VCCA_LVDSTX
VCCA_HDMITX
VCCA_LVDSPLL
VCCA_HDMIPLL
LPF
GPAD
VSSA_MIPIRX
VSS
VSSA_SYSCLK
VSSA_LVDSTX
VSSA_HDMITX
VSSA_LVDSPLL
VSSA_HDMIPLL
R6K
Adr: 0x48 to 0x4B
DSI_CLK_N
DSI_CLK_P
DSI_D0_N
DSI_D0_P
DSI_D1_N
DSI_D1_P
DSI_D2_N
DSI_D2_P
DSI_D3_N
DSI_D3_P
HDMI2_D2_P
HDMI2_D2_N
HDMI2_D1_P
HDMI2_D1_N
HDMI2_D0_P
HDMI2_D0_N
HDMI2_CLK_P
HDMI2_CLK_N
HDMI2_HPD
DSI1_BKL_EN
DSI1_INT#
DSI1_PWM3_DSI
I2S_2_DOUT
I2S_2_SYNC
I2S_2_BCLK
I2C1_SCL
I2C1_SDA
L33 330 ohm/1.7A
L34 330 ohm/1.7A
L35 330 ohm/1.7A
L36 330 ohm/1.7A
L37 330 ohm/1.7A
L38 330 ohm/1.7A
L39 330 ohm/1.7A
C69 100nF
C70 22uF/6.3V
C71 22uF/6.3V
C72 100nF
C73 100nF
C74 22uF/6.3V
C75 100nF
C76 100nF
C77 100nF
C78 100nF
C79 22uF/6.3V
C80 22uF/6.3V
C81 100nF
C82 100nF
C83 22uF/6.3V
C84 22uF/6.3V
C85 3.6nF
C86 100nF
C87 30pF
C88 30pF
R52 120
R60 5.1K
R113 10K
R114 887K
R115 10K
R116 10K
R117 15K
R118 DNP
R119 120
R120 86.6K
Q8 FDV301N
Q13 FDV301N
D11 BAT54C
D22
LED is on when bridge is in reset
X36
Y2 25 MHz
5V_T
1V8
Gnd
Title 45776002 - Yavia Development Board v1.0
Size: Letter
Number:
Revision:
Date: 10/31/2022
Time: 2:02:51 PM
Sheet of
File: 420_MIPI_DSI.SchDoc
Linear Computing
697 Vaughan Road
Toronto, ON, M6E 2Y7
Canada
Linear Computing

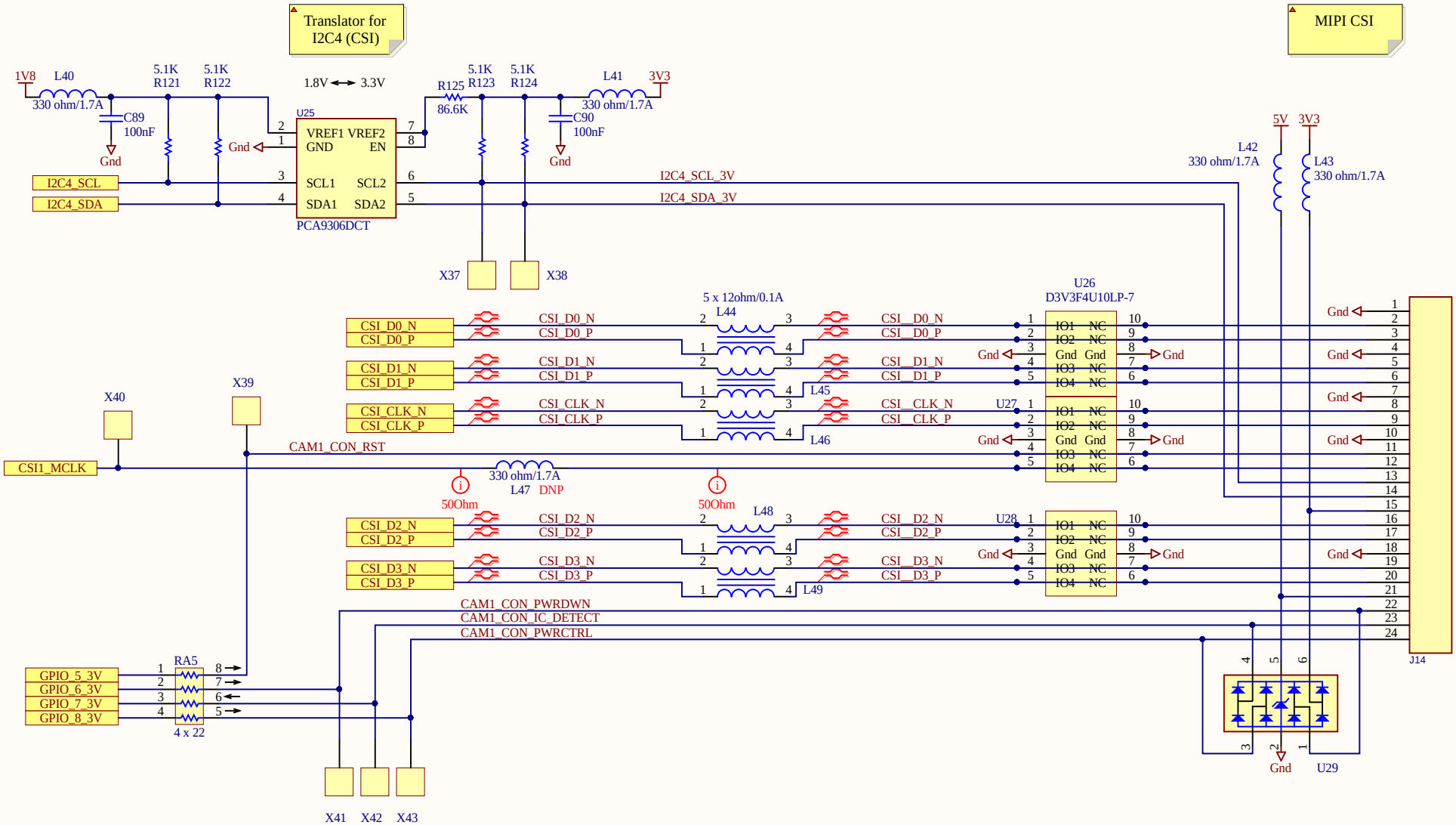

Title	45776002 - Yavia Development Board v1.0		Linear Computing 697 Vaughan Road Toronto, ON, M6E 2Y7 Canada
Size: Letter	Number:	Revision:	
Date: 10/31/2022	Time: 2:02:51 PM	Sheet of	
File: 440_MIPI_CSI.SchDoc			

Linear Computing

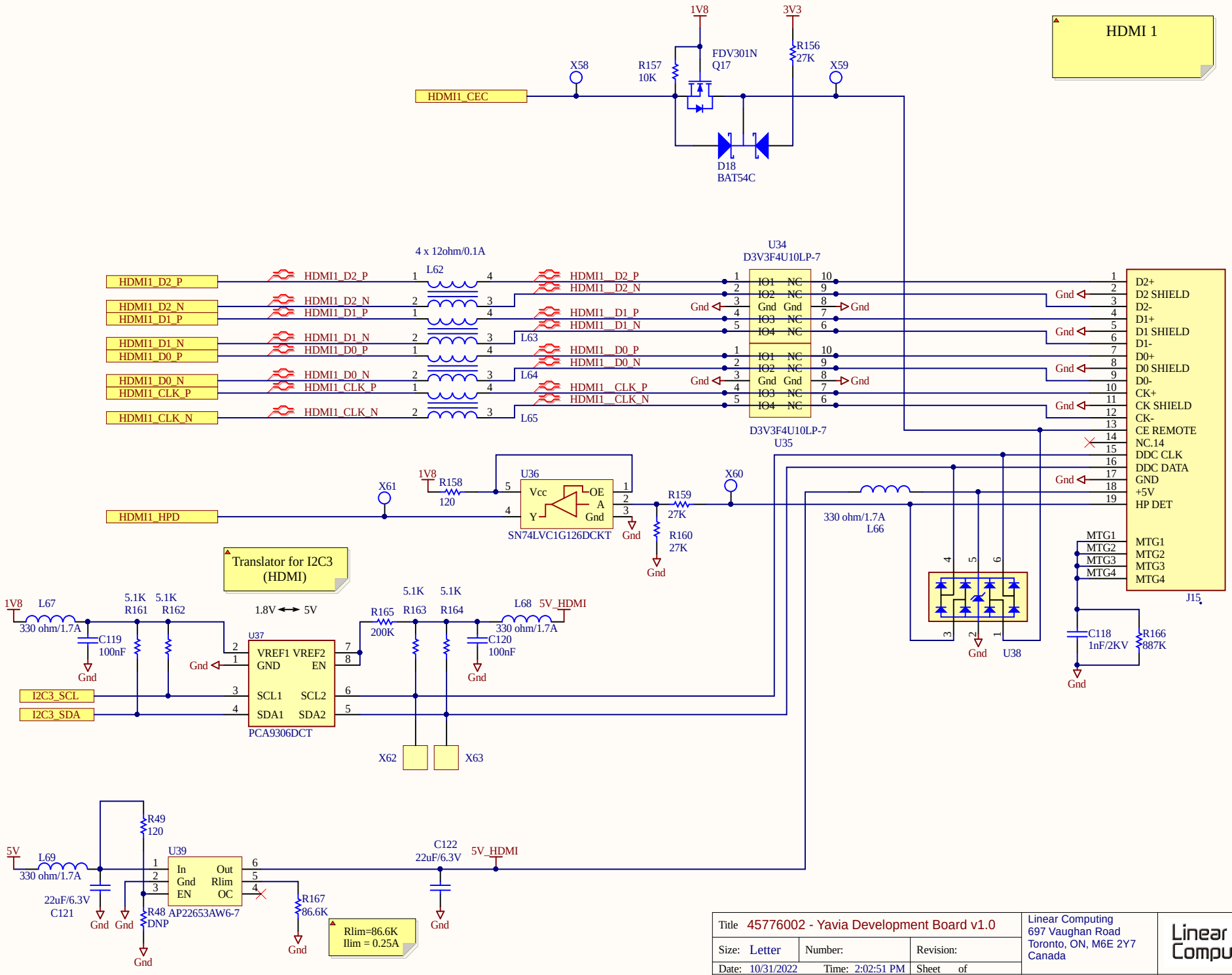

Title	45776002 - Yavia Development Board v1.0		
Size: Letter	Number:	Revision:	
Date: 10/31/2022	Time: 2:02:51 PM	Sheet of	
File: 460_HDMI_1.SchDoc			

Linear Computing
697 Vaughan Road
Toronto, ON, M6E 2Y7
Canada

Linear Computing

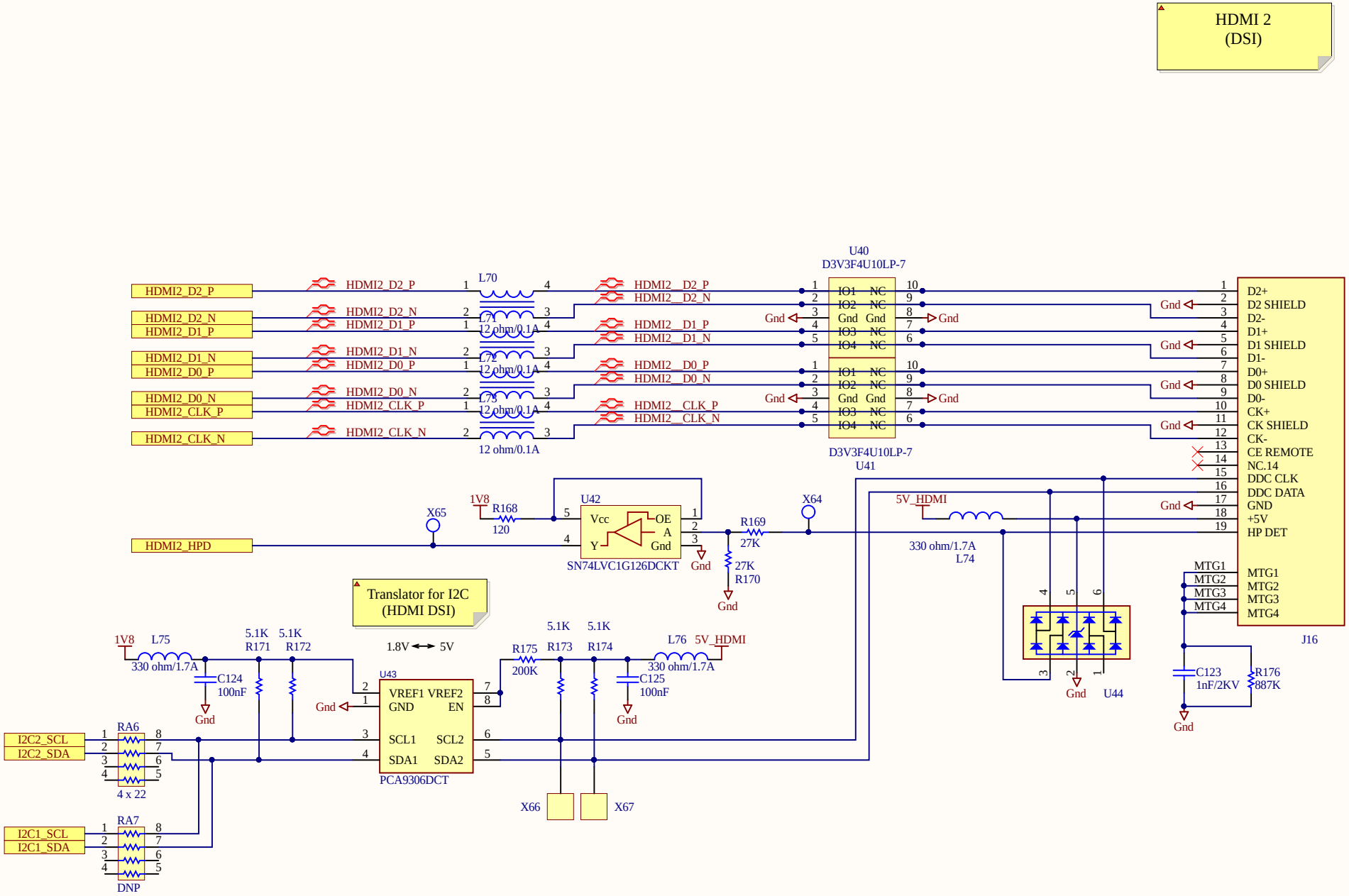

Title	45776002 - Yavia Development Board v1.0		Linear Computing 697 Vaughan Road Toronto, ON, M6E 2Y7 Canada
Size: Letter	Number:	Revision:	
Date: 10/31/2022	Time: 2:02:51 PM	Sheet of	
File: 480_HDMI_2.SchDoc			

Linear Computing

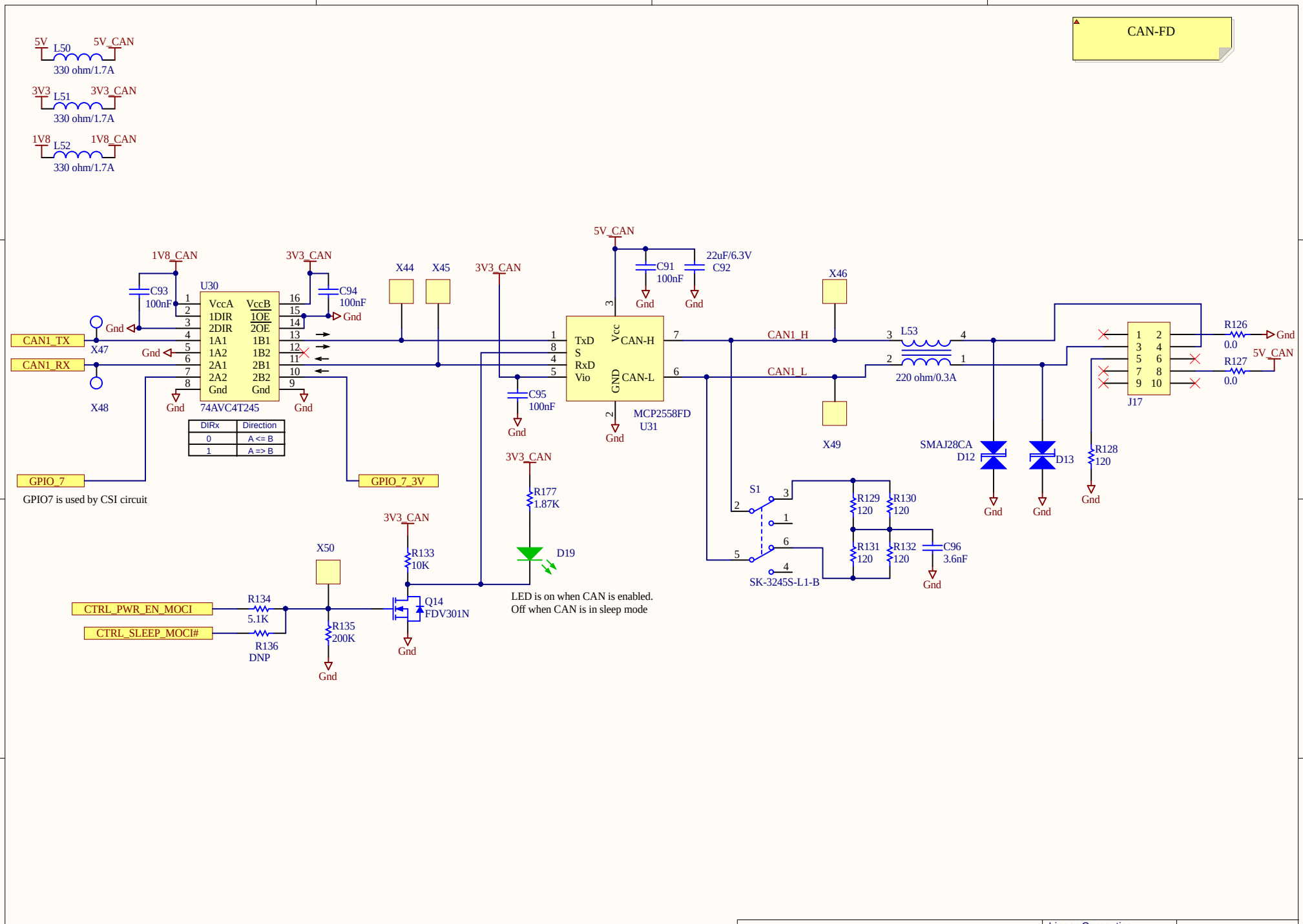

DIRx	Direction
0	A <= B
1	A => B

Title	45776002 - Yavia Development Board v1.0		Linear Computing 697 Vaughan Road Toronto, ON, M6E 2Y7 Canada
Size: Letter	Number:	Revision:	
Date: 10/31/2022	Time: 2:02:51 PM	Sheet of	
File: 500_CAN.SchDoc			

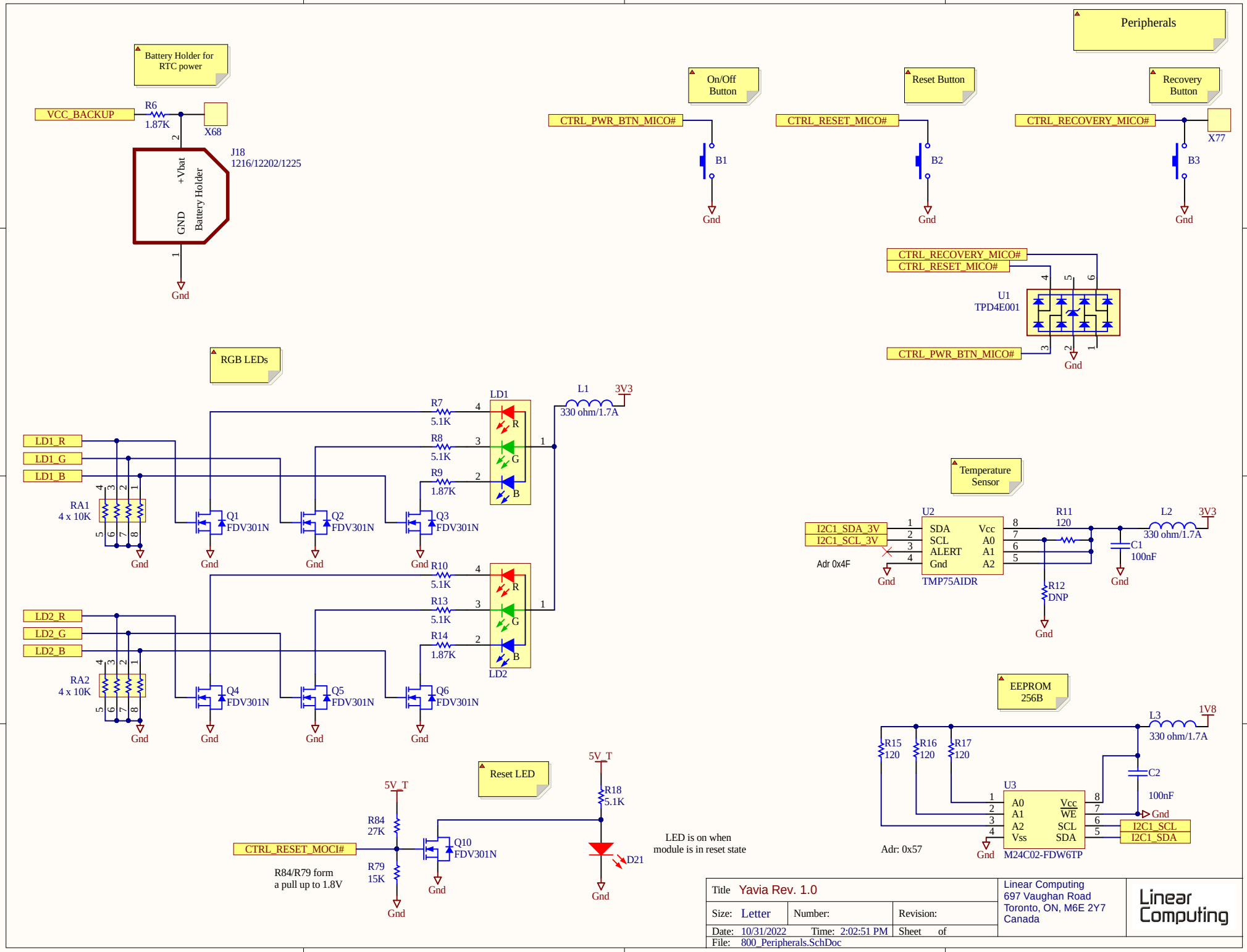
Peripherals
Battery Holder for RTC power
VCC_BACKUP
R6
1.87K
X68
J18
1216/12202/1225
+Vbat
GND
Battery Holder
Gnd
On/Off Button
CTRL_PWR_BTN_MICO#
B1
Reset Button
CTRL_RESET_MICO#
B2
Recovery Button
CTRL_RECOVERY_MICO#
X77
B3
U1
TPD4E001
RGB LEDs
LD1_R
LD1_G
LD1_B
RA1
4 x 10K
R7
5.1K
R8
5.1K
R9
1.87K
LD1
L1
330 ohm/1.7A
3V3
Q1
FDV301N
Q2
FDV301N
Q3
FDV301N
LD2_R
LD2_G
LD2_B
RA2
4 x 10K
R10
5.1K
R13
5.1K
R14
1.87K
LD2
Q4
FDV301N
Q5
FDV301N
Q6
FDV301N
Temperature Sensor
I2C1_SDA_3V
I2C1_SCL_3V
Adr 0x4F
U2
SDA
SCL
ALERT
Gnd
Vcc
A0
A1
A2
TMP75AIDR
R11
120
R12
DNP
C1
100nF
L2
330 ohm/1.7A
EEPROM 256B
R15
120
R16
120
R17
120
L3
330 ohm/1.7A
1V8
C2
100nF
U3
A0
A1
A2
Vss
Vcc
WE
SCL
SDA
I2C1_SCL
I2C1_SDA
Adr: 0x57
M24C02-FDW6TP
Reset LED
5V_T
R84
27K
R79
15K
CTRL_RESET_MOCI#
Q10
FDV301N
R18
5.1K
D21
R84/R79 form a pull up to 1.8V
LED is on when module is in reset state
Title Yavia Rev. 1.0
Size: Letter
Number:
Revision:
Date: 10/31/2022
Time: 2:02:51 PM
Sheet of
File: 800_Peripherals.SchDoc
Linear Computing
697 Vaughan Road
Toronto, ON, M6E 2Y7
Canada
Linear Computing

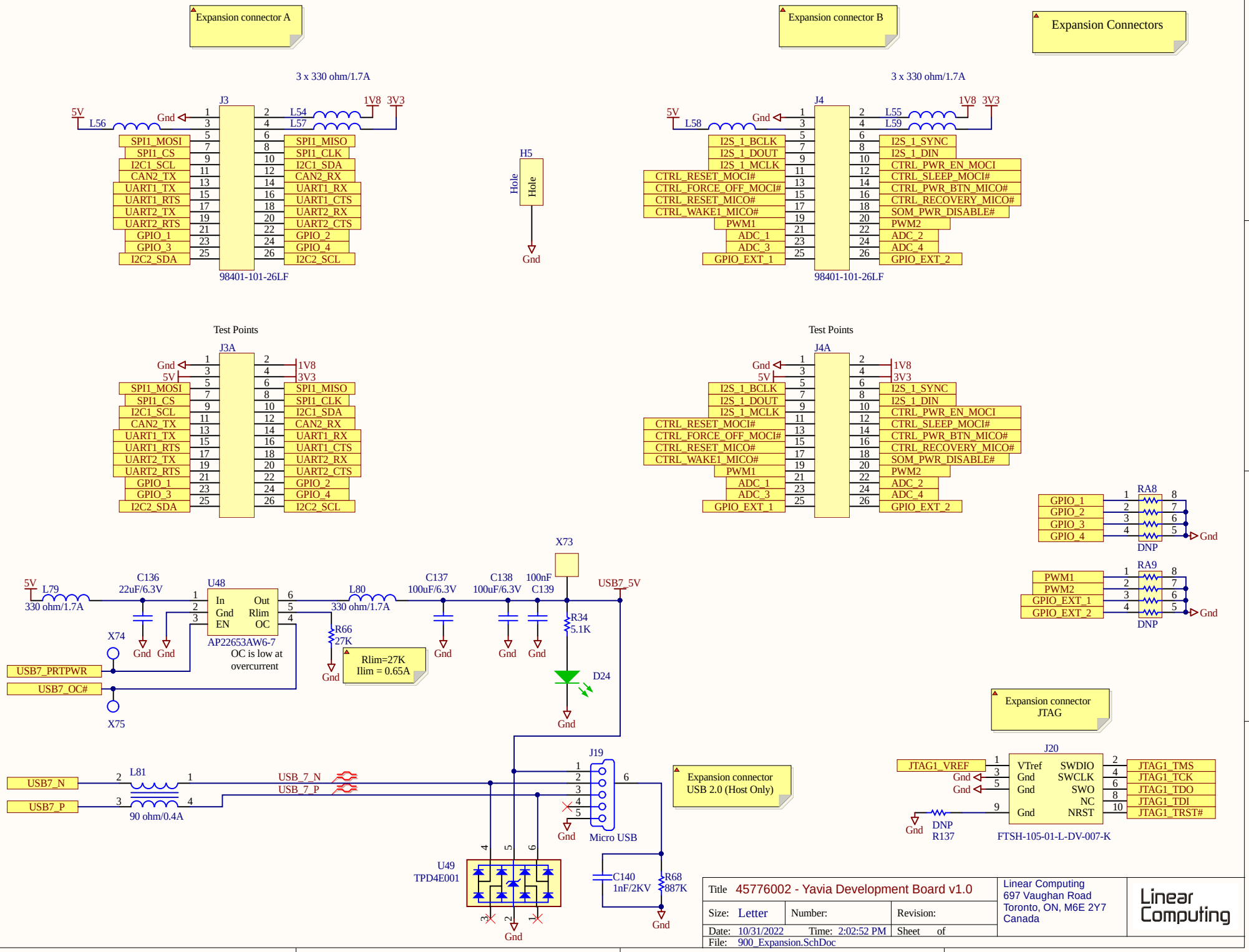
Expansion connector A
Expansion connector B
Expansion Connectors
3 x 330 ohm/1.7A
J3
J4
5V
L56
L58
Gnd
L54
L57
L55
L59
1V8
3V3
SPI1_MOSI
SPI1_CS
I2C1_SCL
CAN2_TX
UART1_TX
UART1_RTS
UART2_TX
UART2_RTS
GPIO_1
GPIO_3
I2C2_SDA
SPI1_MISO
SPI1_CLK
I2C1_SDA
CAN2_RX
UART1_RX
UART1_CTS
UART2_RX
UART2_CTS
GPIO_2
GPIO_4
I2C2_SCL
I2S_1_BCLK
I2S_1_DOUT
I2S_1_MCLK
CTRL_RESET_MOCI#
CTRL_FORCE_OFF_MOCI#
CTRL_RESET_MICO#
CTRL_WAKE1_MICO#
PWM1
ADC_1
ADC_3
GPIO_EXT_1
I2S_1_SYNC
I2S_1_DIN
CTRL_PWR_EN_MOCI
CTRL_SLEEP_MOCI#
CTRL_PWR_BTN_MICO#
CTRL_RECOVERY_MICO#
SOM_PWR_DISABLE#
PWM2
ADC_2
ADC_4
GPIO_EXT_2
98401-101-26LF
H5
Hole
Test Points
J3A
J4A
RA8
RA9
DNP
X73
X74
X75
U48
In
Gnd
EN
Out
Rlim
OC
AP22653AW6-7
OC is low at overcurrent
C136
22uF/6.3V
L79
330 ohm/1.7A
L80
C137
100uF/6.3V
C138
100uF/6.3V
100nF
C139
USB7_5V
R66
27K
Rlim=27K
Ilim = 0.65A
R34
5.1K
D24
USB7_PRTPWR
USB7_OC#
USB7_N
USB7_P
L81
90 ohm/0.4A
USB_7_N
USB_7_P
J19
Micro USB
Expansion connector USB 2.0 (Host Only)
U49
TPD4E001
C140
1nF/2KV
R68
887K
Expansion connector JTAG
J20
JTAG1_VREF
VTref
SWDIO
SWCLK
SWO
NC
NRST
JTAG1_TMS
JTAG1_TCK
JTAG1_TDO
JTAG1_TDI
JTAG1_TRST#
DNP
R137
FTSH-105-01-L-DV-007-K
Title 45776002 - Yavia Development Board v1.0
Size: Letter
Number:
Revision:
Date: 10/31/2022
Time: 2:02:52 PM
Sheet of
File: 900_Expansion.SchDoc
Linear Computing
697 Vaughan Road
Toronto, ON, M6E 2Y7
Canada
Linear Computing