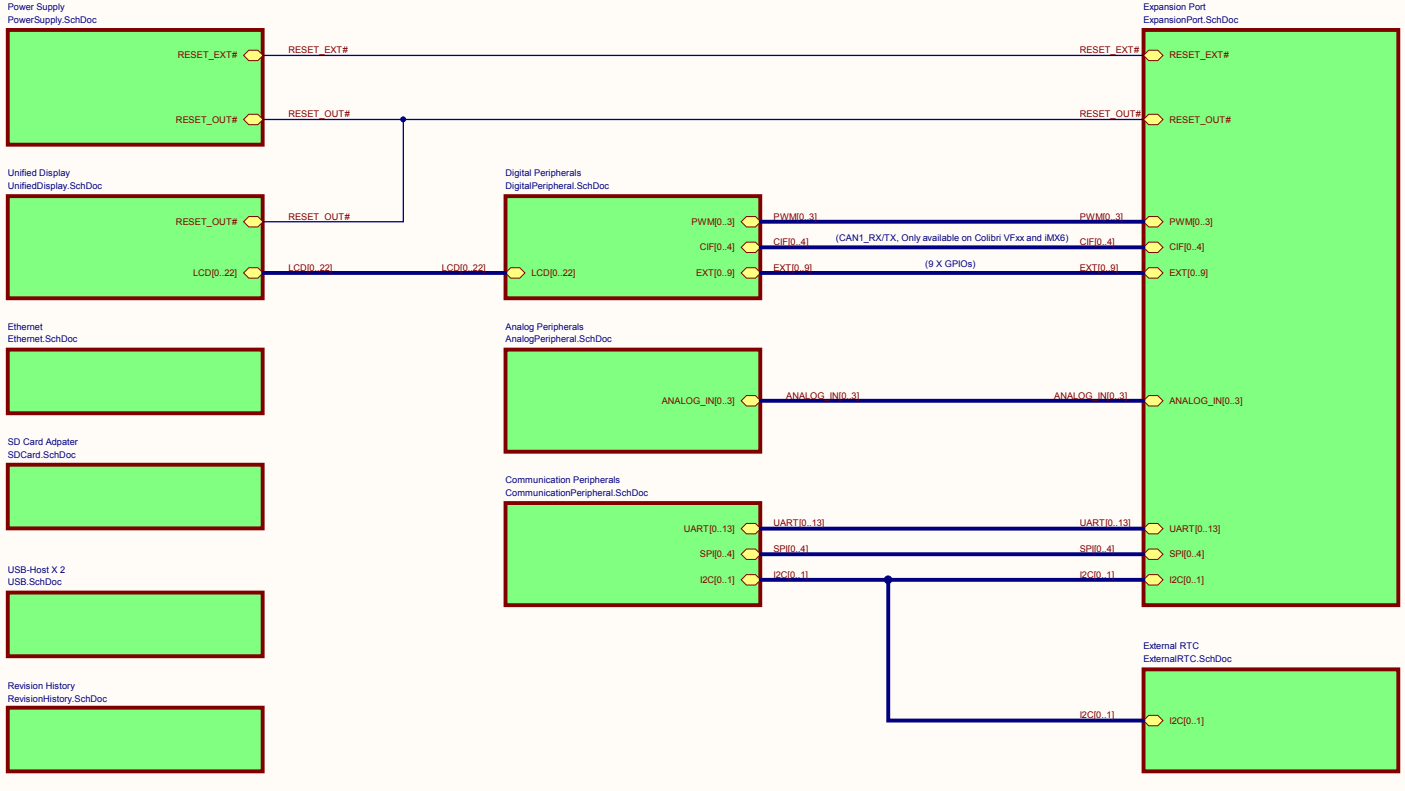

Toradex
Swiss. Embedded. Computing

Title	*Viola*		*Toradex AG* *Altsagenstrasse 5* *Horw* *6048* *Switzerland*
Size: A3	Number: 1	Revision: V1.0	
Date: 9/1/2014	Time: 5:39:33 PM	Sheet 1 of 12	
File: HardwareArchitecture.SchDoc			

REVISION HISTORY

1. Design Revision V1.0 : Preliminary design.
   Date: 29th April 2014

2. Design Revision V1.0 :
   - Ethernet.SchDoc : Added Note 15, about SODIMM_191 (ETH_AGND) pin. Added error notes for ETH_TX0_P/N signals.
   Date: 01th Sept 2014

IF IN DOUBT ASK

Toradex
Swiss. Embedded. Computing

Title	*Viola*		*Toradex AG* *Altsagenstrasse 5* *Horw* *6048* *Switzerland*
Size: A3	Number: 2	Revision: V1.0	
Date: 9/1/2014	Time: 5:39:33 PM	Sheet 2 of 12	
File: RevisionHistory.SchDoc			

Input Power- Overvoltage Proetction and EMI Filter

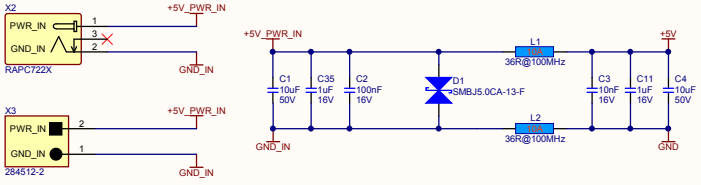

Notes 1:
Recommended Power Input:
Voltage: 5V, +/- 0.25V, Current: 5A (MAX)
Important: Power supply is not reverse polarity protected

DC/DC Buck Regulator: 5V to 3.3V, 2A

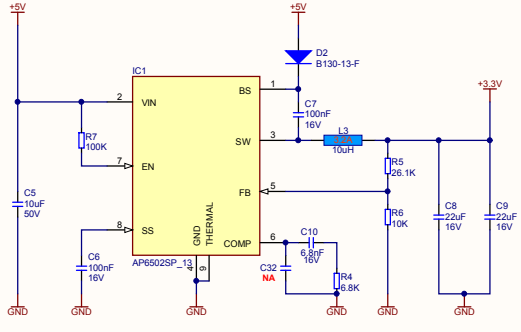

Input Power- Power-On Indication

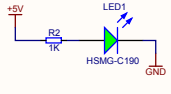

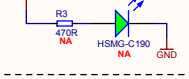

Analogue/Audio Power

Notes 2:
L13 can be replaced by 0R ohm resistor.
Need to test.

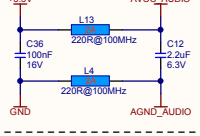

ESD Shield

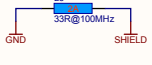

Power Input - Colibri

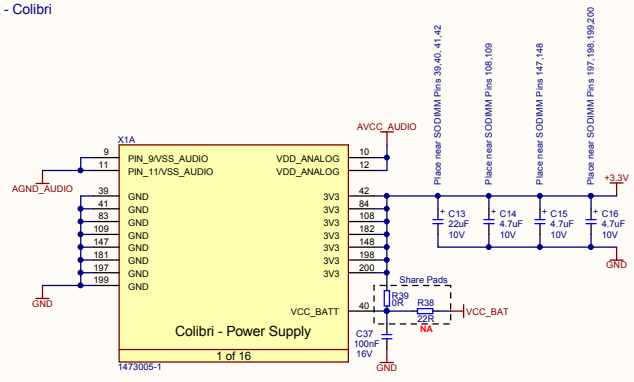

Power Reset and Control - Colibri

Notes 3:
RESET_OUT# and RESET_EXT# are available on expansion port.

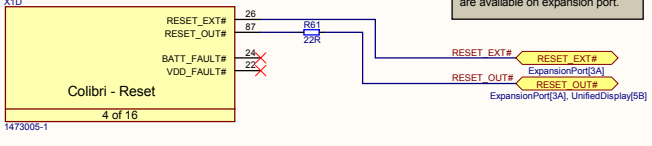

Mechincal - Logo and Fiducials

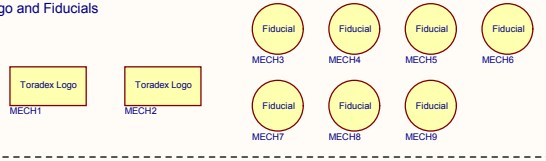

Toradex
Swiss. Embedded. Computing

Title	Viola		Toradex AG Altsagenstrasse 5 Horw 6048 Switzerland
Size: A3	Number: 3	Revision: V1.0	
Date: 9/1/2014	Time: 5:39:33 PM	Sheet 3 of 12	
File: PowerSupply.SchDoc			

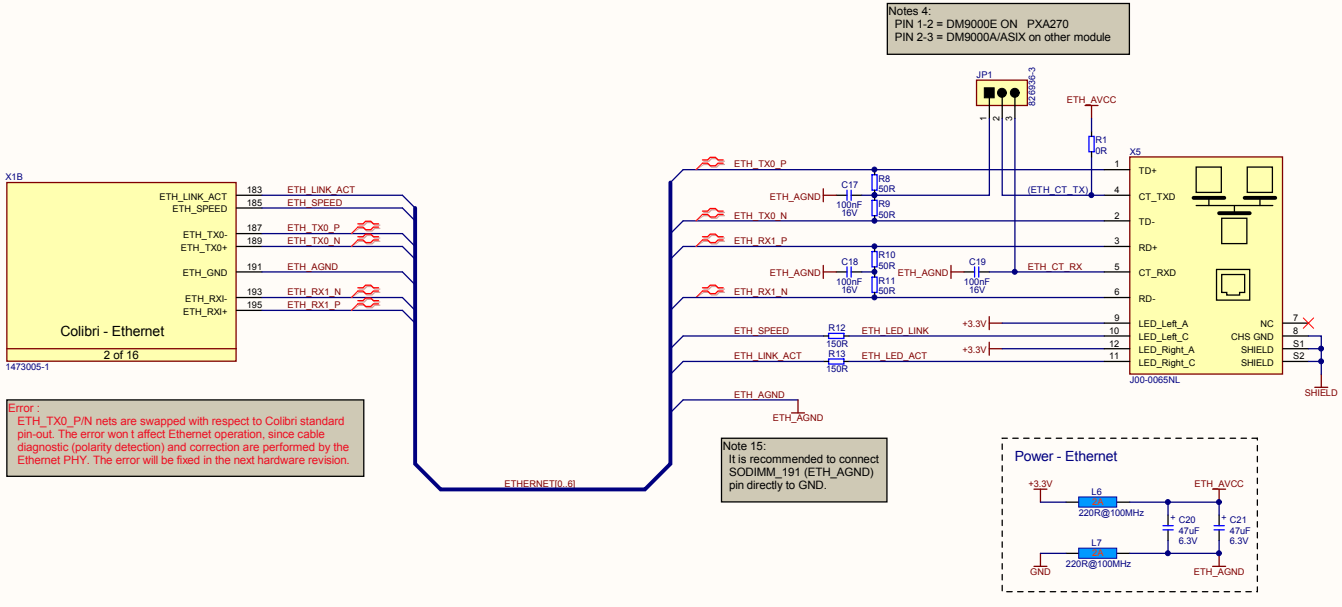

Toradex
Swiss. Embedded. Computing

Title	*Viola*		*Toradex AG Altsagenstrasse 5 Horw 6048 Switzerland*
Size: A3	Number: 4	Revision: V1.0	
Date: 9/1/2014	Time: 5:39:33 PM	Sheet 4 of 12	
File: Ethernet.SchDoc			

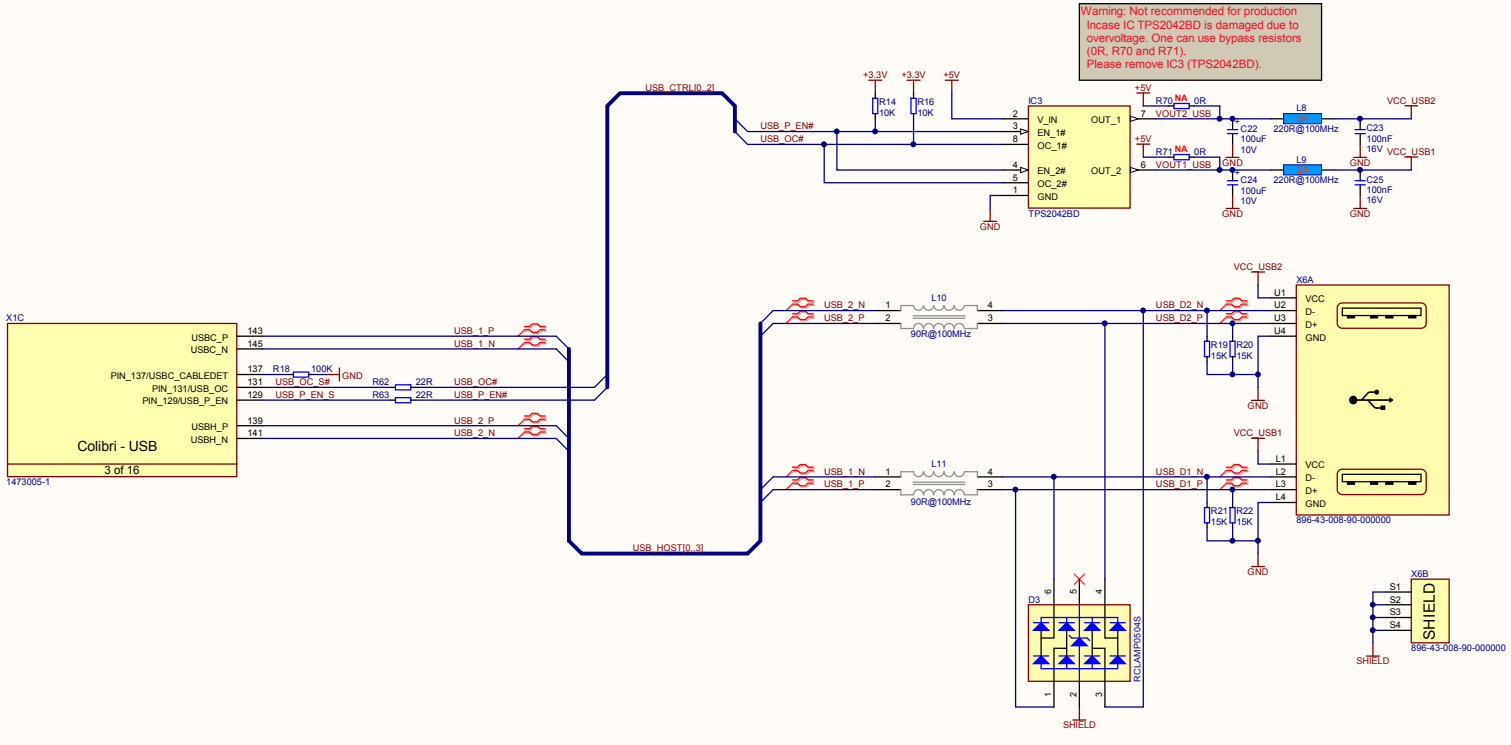

Toradex
Swiss. Embedded. Computing

Title	*Viola*		*Toradex AG* *Altsagenstrasse 5* *Horw* *6048* *Switzerland*
Size: A3	Number: 5	Revision: V1.0	
Date: 9/1/2014	Time: 5:39:34 PM	Sheet 5 of 12	
File: USB.SchDoc			

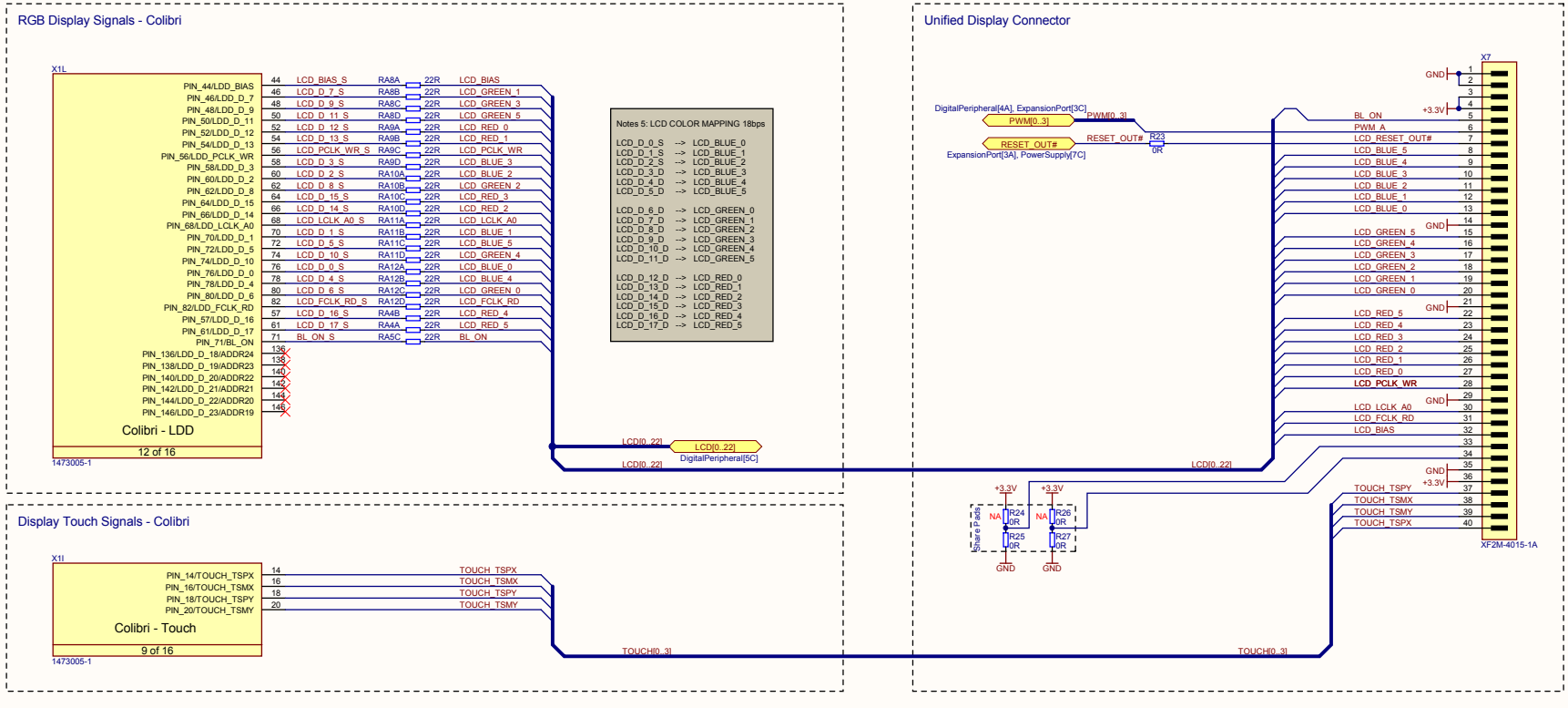

Toradex
Swiss. Embedded. Computing

Title	*Viola*		*Toradex AG* *Altsagenstrasse 5* *Horw* *6048* *Switzerland*
Size: A3	Number: 6	Revision: V1.0	
Date: 9/1/2014	Time: 5:39:34 PM	Sheet 6 of 12	
File: UnifiedDisplay.SchDoc			

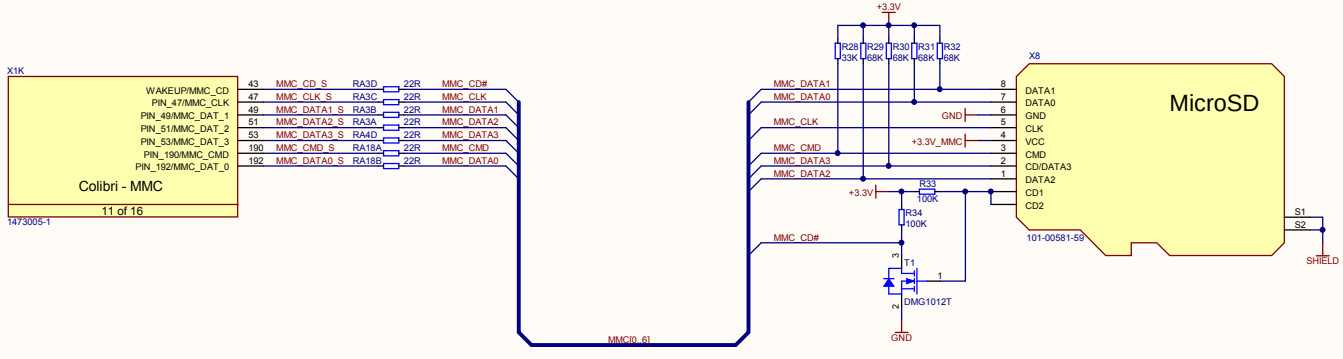

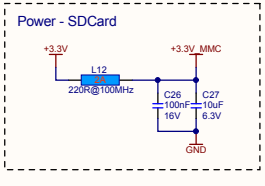

Toradex
Swiss. Embedded. Computing

Title *Viola*			*Toradex AG Altsagenstrasse 5 Horw 6048 Switzerland*
Size: A3	Number: 7	Revision: V1.0	
Date: 9/1/2014	Time: 5:39:34 PM	Sheet 7 of 12	
File: SDCard.SchDoc			

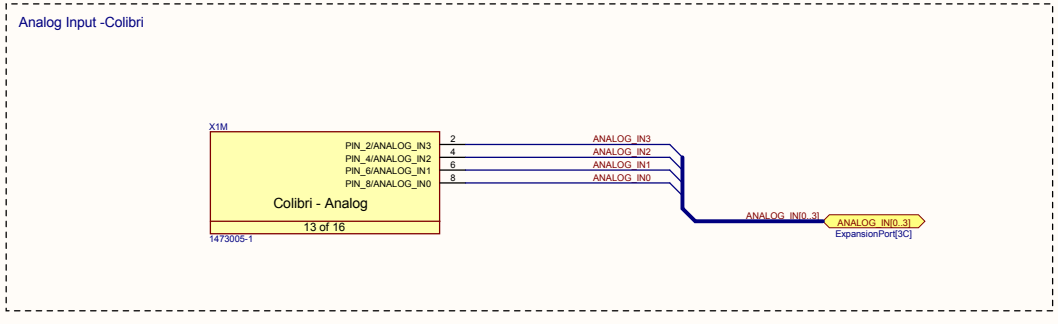

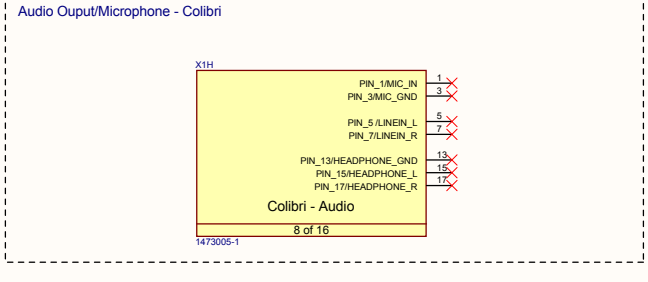

Toradex
Swiss. Embedded. Computing

Title	*Viola*		*Toradex AG* *Altsagenstrasse 5* *Horw* *6048* *Switzerland*
Size: A3	Number: 8	Revision: V1.0	
Date: 9/1/2014	Time: 5:39:34 PM	Sheet 8 of 12	
File: AnalogPeripheral.SchDoc			

I2C - Colibri

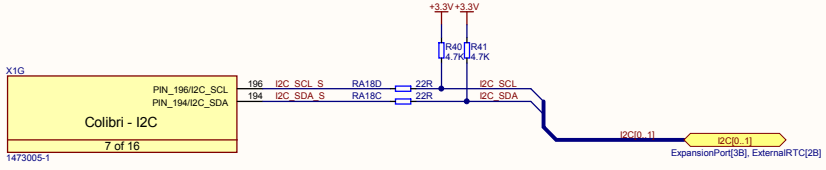

Universal Asynchronous Receiver/Transmitter - Colibri

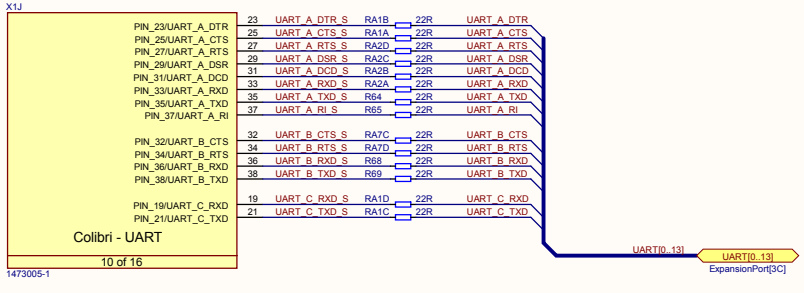

Serial Peripheral Interface/ Controller Area Network - Colibri

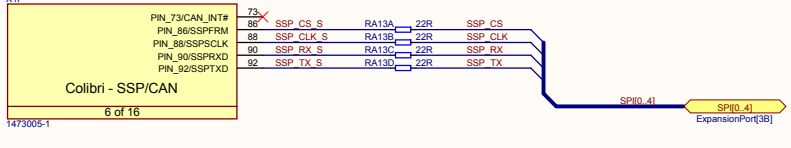

Toradex
Swiss. Embedded. Computing

Title	Viola		Toradex AG Altsagenstrasse 5 Horw 6048 Switzerland
Size: A3	Number: 9	Revision: V1.0	
Date: 9/1/2014	Time: 5:39:34 PM	Sheet 9 of 12	
File: CommunicationPeripheral.SchDoc			

PWM Output - Colibri

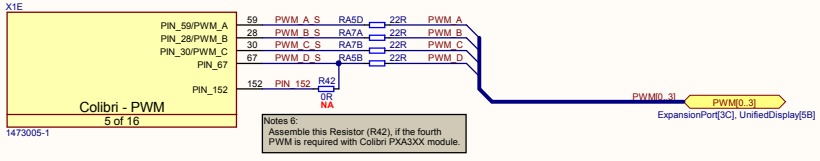

GPIO Output - Colibri

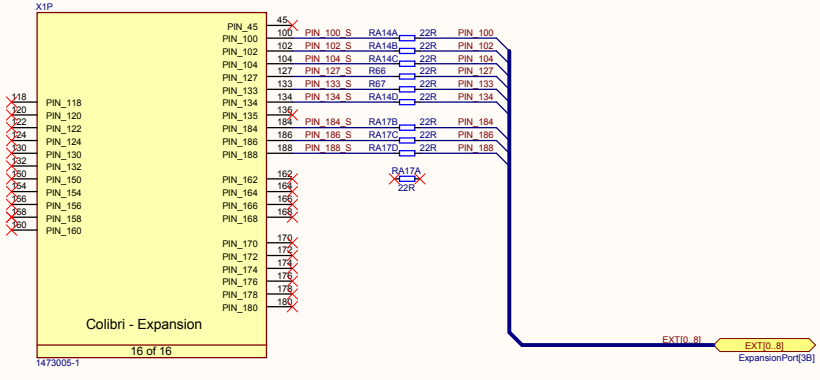

SDCard boot mode, Recovery mode - Colibri

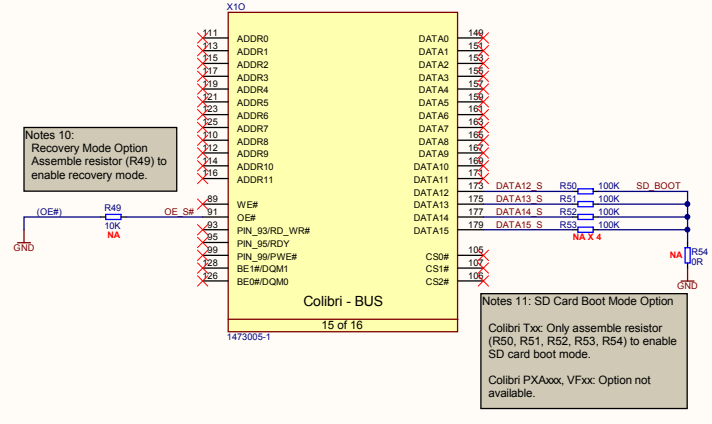

Module Specific (PS/2, CAN) - Colibri

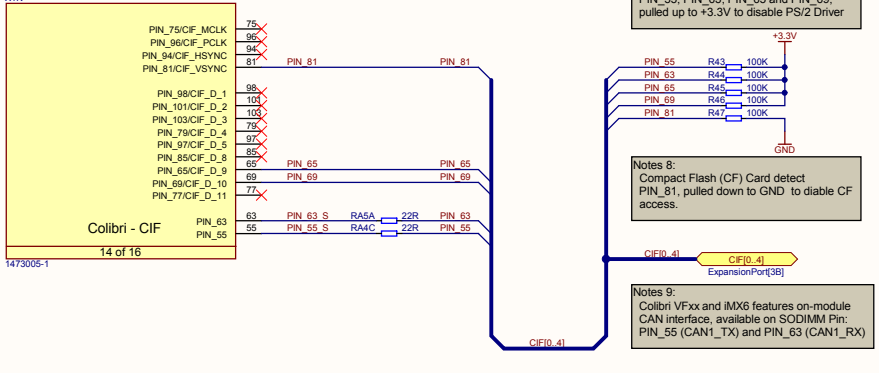

SODIMM Pin Name	LCCB, Pulled Up/Down	Colibri PXA270	Colibri PXA300	Colibri PXA310XT	Colibri PXA310	Colibri PXA320	Colibri Txx	Colibri VFxx
	Disable PS/2 Driver							
SODIMM_55	pull up, 100K to +3.3V	GPIO19	GPIO80	GPIO80	GPIO10_2 *(2)	GPIO78 *(4)	SDA1 / (PS2 Mouse GPIO)	GPIO / PTB17 / CAN1_TX
SODIMM_63	pull up, 100K to +3.3V	GPIO14	GPIO31 *(1)	GPIO31 *(1)	GPIO9_2 *(2)	GPIO42 / GPIO105 *(5)	SCL1 / (PS2 Mouse GPIO)	GPIO / PTB16 / CAN1_RX
SODIMM_65	pull up, 100K to +3.3V	GPIO106	GPIO48 / GPIO124	GPIO48 / GPIO124	GPIO48 / GPIO124	GPIO58 / GPIO124 *(5)	CIF_DD<9>; SDA2 / (PS2 Mouse GPIO)	CIF_DD<9>/ PTB19 / Keybaord_Out<3>
SODIMM_69	pull up, 100K to +3.3V	GPIO20	GPIO77 *(1)	GPIO77 *(1)	GPIO8_2 *(2)	GPIO75 *(4)	SCL2 / (PS2 Mouse GPIO)	GPIO / PTD30
	Disable Compact Flash Driver							
SODIMM_81	pull up, 100K to GND	GPIO84	CIF_VSYNC(GPIO52) / GPIO83 *(3)	CIF_VSYNC(GPIO52) / GPIO83 *(3)	CIF_VSYNC(GPIO52) / GPIO83 *(3)	CIF_VSYNC / GPIO81 *(5)	CIF_VF (VSYNC)	CIF_VSYNC / PTB7

*(1) These pins are connected to an SODIMM pin and to an extension connector pin. Be careful by using these pins when using the extension connector.
*(2) These pins are second instance GPIOs. See Colibri PXA300/310 datasheet, chapter 4.5 GPIO for more details.
*(3) These pins don t have GPIO as alternate function 0. SeeColibri PXA300/310, chapter 4.5 GPIO for more details.
*(4) For the electrical specification please refer to PXA320 Processor Electrical, Mechanical and Thermal Specification Datasheet.
*(5) See Colibri PXA320, chapter 4.6 GPIO for more details. Multiplexed pin

Toradex
Swiss. Embedded. Computing

Title	Viola		Toradex AG Altsagenstrasse 5 Horw 6048 Switzerland
Size: A3	Number: 10	Revision: V1.0	
Date: 9/1/2014	Time: 5:39:34 PM	Sheet 10 of 12	
File: DigitalPeripheral.SchDoc			

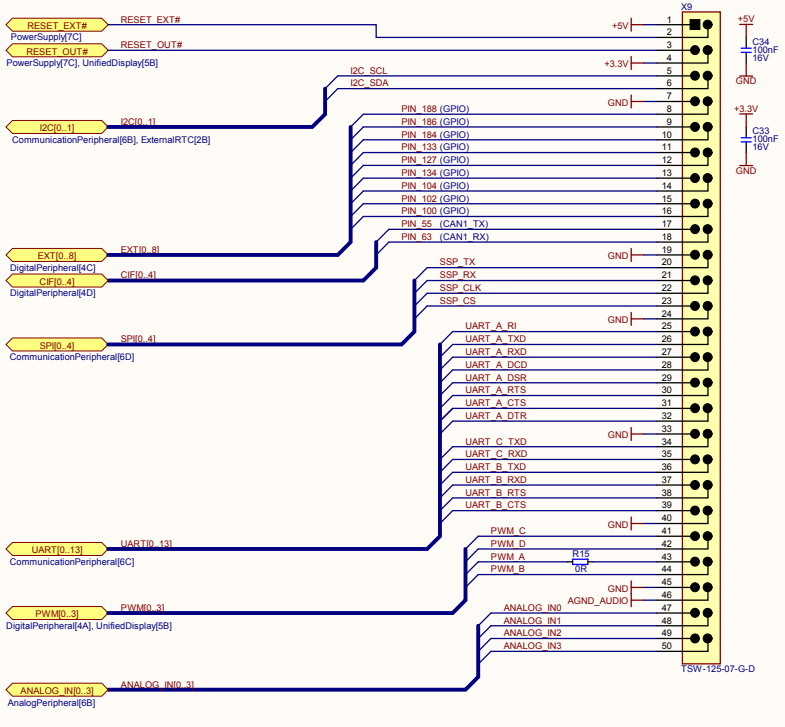

Toradex
Swiss. Embedded. Computing

Title	Viola		Toradex AG Altsagenstrasse 5 Horw 6048 Switzerland
Size: A3	Number: 11	Revision: V1.0	
Date: 9/1/2014	Time: 5:39:34 PM	Sheet 11 of 12	
File: ExpansionPort.SchDoc			

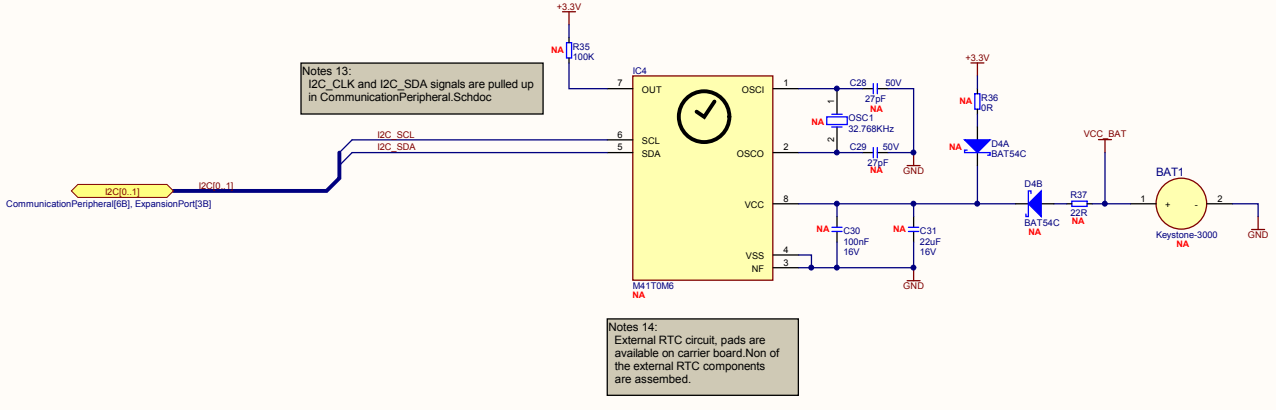

Toradex
Swiss. Embedded. Computing

Title	*Viola*		*Toradex AG* *Altsagenstrasse 5* *Horw* *6048* *Switzerland*
Size: A3	Number: 12	Revision: V1.0	
Date: 9/1/2014	Time: 5:39:34 PM	Sheet 12 of 12	
File: ExternalRTC.SchDoc			